DucoBox Reno UK / IE

ENGLISH en

Installation guide

L2004970 (Revision E | 01.06.2026)

DUCO

Table of contents

01 Introduction 3
02 Regulations and safety instructions 4
03 Mounting 5
03.A Position 5
03.B Mounting 5
03.C Air duct connections 6
04 Communication 7
04.A Connection & buttons 7
05 Additional control option 9
05.A CO_2 Box sensor 9
06 Electronical installation 11
06.A Change settings 11
06.B Installer / User mode 11
06.C LED indications 11
06.D Pairing components 12
06.E Removing / replacing components 13
06.F Tips 13
07 Air calibration 14
07.A Air calibration procedure for DucoBox Reno UK / IE 14
07.B Option: installation of user controller on the DucoBox 16
07.C Checking 17
08 Maintenance & service 18
09 Warranty 19
10 Legislation 19

Translation of the original instructions

See www.duco.eu for information regarding warranty, maintenance, technical data, etc.
Installation, connection, maintenance and repairs are to be carried out by an accredited installer. The electronic components of this product may be live. Avoid contact with water.

Vero DUCO - Handelsstraat 19 - 8630 Veurne - Belgium
tel +32 58 33 00 33 - info@duco.eu - www.duco.eu

01 Introduction

The DucoBox Reno UK / IE, performs two functions in a DUCO Demand-Controlled Natural Ventilation System.

On the one hand, it is the controller, or brain of the system. It receives and interprets signals from components (measurements from sensors or manual input), on the basis of which it controls the ventilation system.

On the other hand, it is the extractor fan that exhausts stale air with excessive CO_2 content or humidity.CO_2 levels are measured via optional CO_2 sensors; the humidity level is measured via a standard RH sensor integrated in the box itself.

DUCO advises against connecting the DucoBox (via a duct or directly) to an extractor hood, regardless of the type. This usually causes excessive fouling in the DucoBox, which affects its operation or has a more direct effect on output.

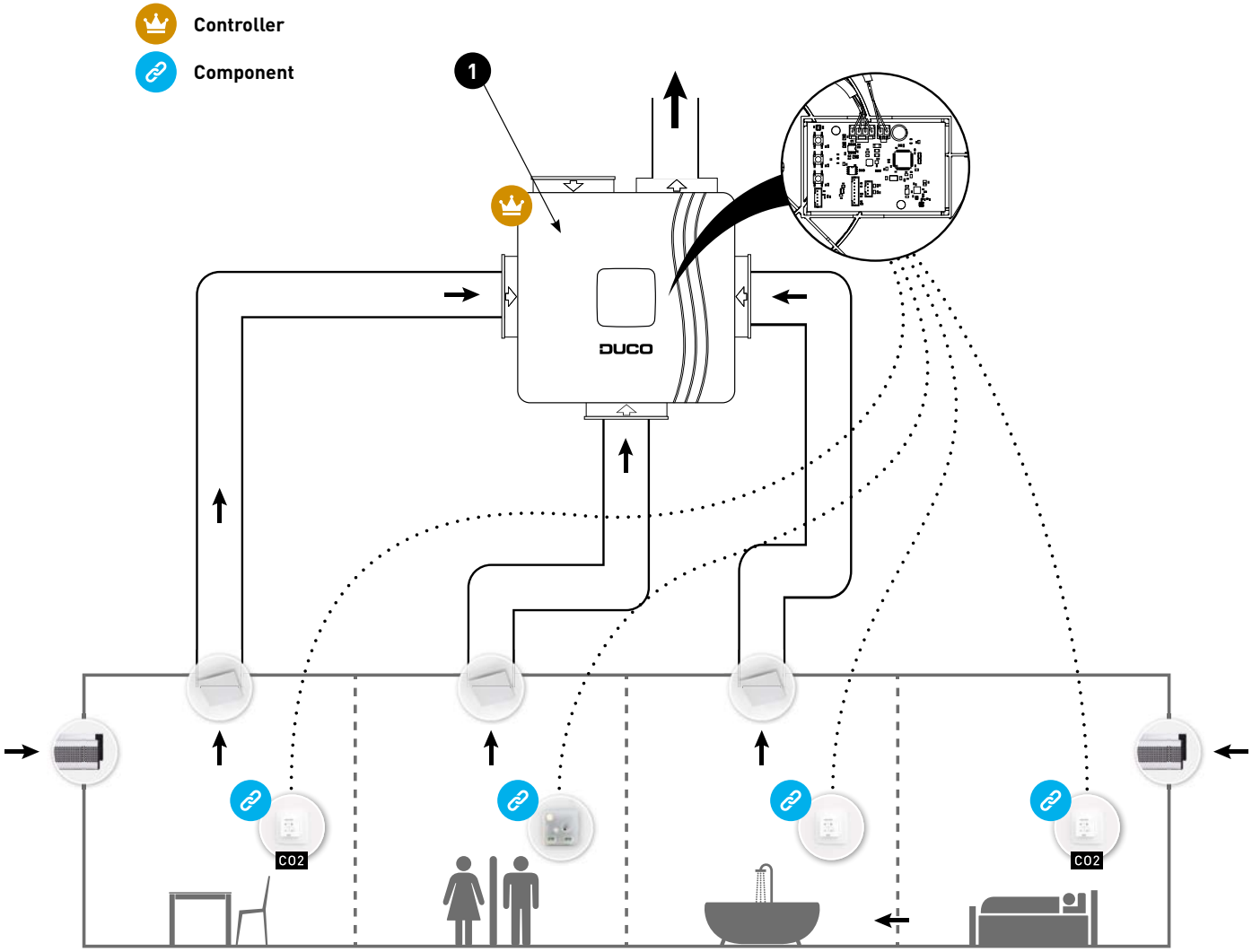

Figure 1: With standard integrated RH sensor.

02 Regulations and safety instructions

The installer is responsible for installing and commissioning the unit.

Do not install this product in areas where the following are present or could occur:
- **Excessively greasy atmosphere.**
- **Corrosive or flammable gases, liquids or fumes.**
- **Room air temperature above 40 °C or below -5 °C.**
- **Relative humidity higher than 90 % or outdoors.**
- **Obstacles that prevent access to or the removal of the fan unit.**
- **Bends in the ducts immediately upstream of the fan unit.**
- **The DucoBox Reno UK / IE should not be connected to a (motorless) extractor hood or dryer.**

Take care to ensure that the electrical supply is a 230 V, single-phase earthed, 50/60 Hz, AC system. The device must be connected to a fused wall socket. Preferably mount the unit in an enclosed space.
The fan unit can only be used with the appropriate DUCO accessories and user controller(s). The installer must ensure that the fan unit is positioned at least 3 m away from a chimney pipe. The unit must not be used in locations where it could be subjected to direct water spraying. Certain situations may require the use of acoustic insulation materials.
Check that the unit is complete and undamaged when you take it out of the packaging. If in doubt about this, contact DUCO / your DUCO distribution point.
Electrical equipment should be handled with care.
- Never touch the unit with wet hands.
- Never touch the unit when barefoot.

Do not use the unit in the presence of flammable or volatile substances such as alcohol, insecticides, petrol etc. Make sure that the electrical system to which the unit is connected, complies with the stipulated conditions. Do not expose the device to weather conditions. Do not place any objects on the unit. Do not use the unit as an extractor for water heaters, heating systems, etc. Ensure that the unit discharges into a single exhaust duct that is suitable and installed for the purpose and exhausts to the outside. Ensure that the electrical circuit is not damaged. Always adhere to the safety instructions in the manual when installing the device. Failure to follow these safety instructions, warnings, notes and instructions may result in damage to the DucoBox Reno UK / IE or personal injury and DUCO NV cannot be held responsible for this. The installation of the DucoBox Reno UK / IE should be carried out in accordance with the general and locally applicable building, safety and installation regulations of the municipality and other authorities. Only an approved installer should install, connect and commission the DucoBox Reno UK / IE as described in this manual. Keep the manual close to your unit. Maintenance instructions must be followed closely in order to avoid damage and/or wear. It is recommended that a maintenance contract be taken out to ensure the unit is regularly inspected and cleaned. The device must be fitted in a touch-safe manner. This means, among other things, that under normal operating conditions no-one can reach moving or electrically live parts of the fan without intending to do so for operations such as:
- Taking off the cover.
- Taking the motor module out of the fan after removing the cover.
- Disconnecting a duct or control valve from the connection opening during normal operation.

It ought to be impossible to touch the fan by hand. That is why ductwork must always be connected to the DucoBox Reno UK / IE before putting it into operation. Therefore, at least 900 mm of ducting must be connected to the unit.
The DucoBox Reno UK / IE meets the legal requirements for electrical appliances.
Always ensure that before work begins, the device is isolated from the power supply by removing the power cord from the wall socket or by switching off the fuse. (Use a measuring instrument to check that this is actually the case!)
Use suitable / appropriate tools to work on the unit.
Use the unit only for applications for which it has been designed, as stated in this manual.
The ventilation unit should operate permanently, i.e. the DucoBox Reno UK / IE should never be switched off (legal requirement).
The electronic components of the ventilation unit may be live. In the event of a fault, contact a professional installer and have repairs carried out only by qualified personnel.
This unit is not intended for use by people (including children) with reduced physical, sensory or mental capabilities, or who lack experience of know-how, unless they are supervised or have been given instructions on the use of the unit by a person who is responsible for their safety. Children must be supervised to ensure that they do not play with the unit.
If the power cord is damaged, it must be replaced by the manufacturer, after-sales support or individuals with comparable qualifications in order to prevent any hazard.
The user is responsible for safely removing the ventilation unit at the end of its service life, in accordance with locally applicable laws or regulations. You can also take the unit to a collection point for used electrical equipment.
The unit is only suitable for housing construction and not for industrial use, such as swimming pools and saunas.
When handling electronics, always take ESD[1] inhibiting measures, such as wearing a grounded wristband.
Modifications to the unit or to specifications stated in this document are not permitted.
Do not pull on the cord to remove the plug from the socket.
Always consult the installer of your combustion appliance to establish whether there is any risk of flue gases entering the home.
Check that the voltage shown on the type plate matches the local mains voltage before connecting the device. You will find the type plate inside the box.

1 ESD = electrostatic discharge

03 Mounting

03.A Position

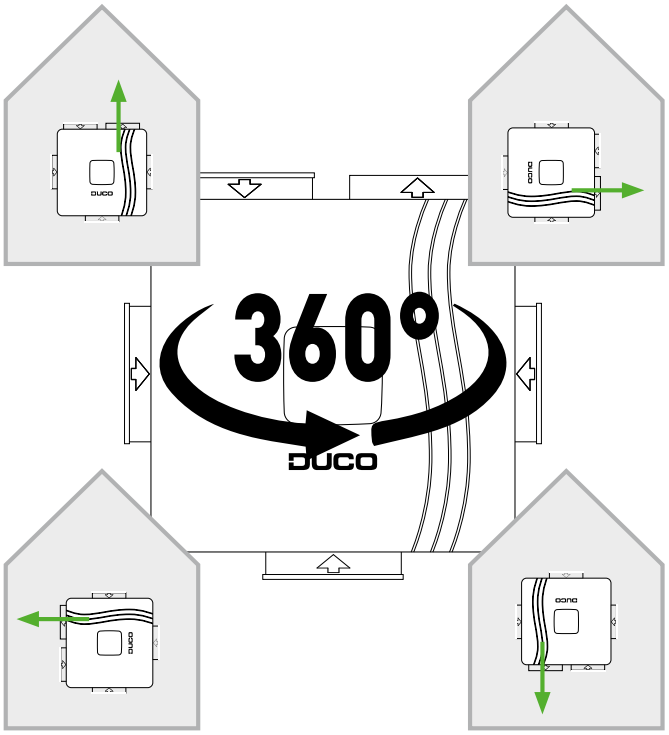

figure 2: Against a wall, you can position the Box in any possible direction.

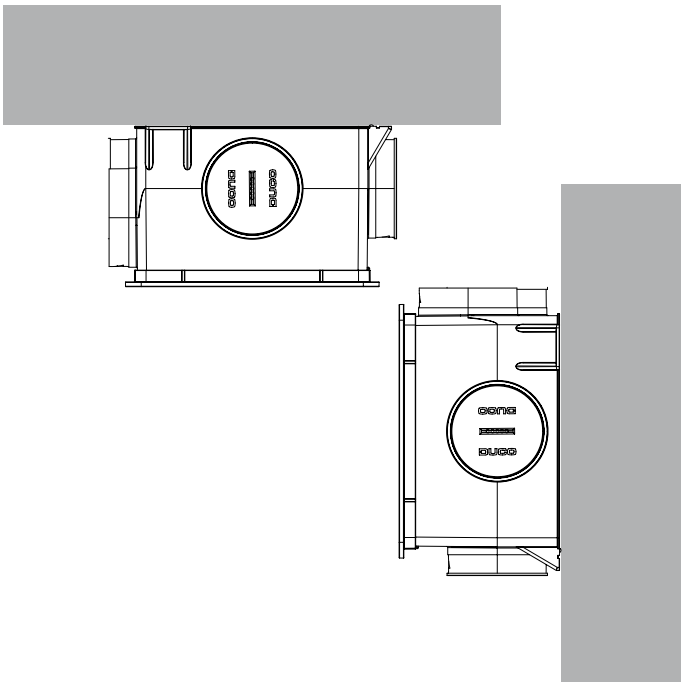

Figure 3: You can mount the box vertically or horizontally.

If you place the DucoBox Reno UK / IE in a damp room with a water connection, avoid placing it on the floor.

03.B Mounting

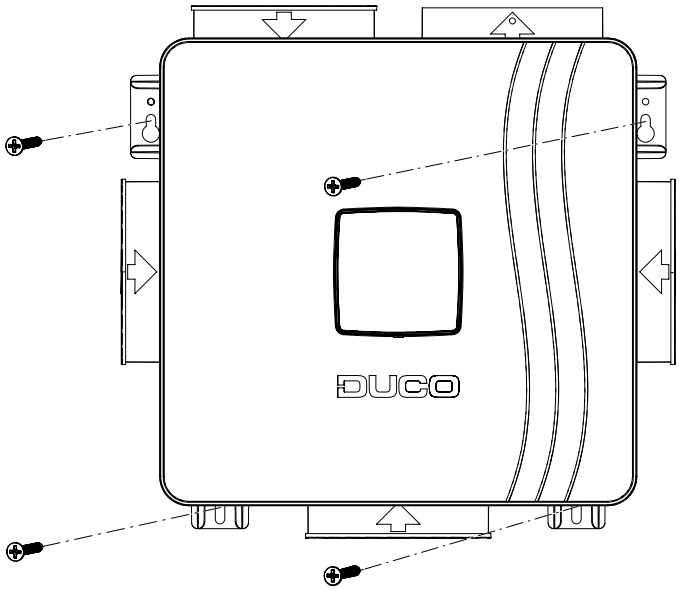

Figure 4: Mounting: adapt the mounting material to the surface.

03.C Air duct connections

Limit the resistance. A non-return flap is required when discharging into a manifold.

Be sure to take note of the '10 unmissable tips' as well when mounting the DucoBox. Avoiding excessive use of bends, especially angles greater than 90° and adhering to the diameter guidelines for the ductwork will ensure that the ventilation box is able to do its job satisfactorily. Failure to take account of this recommendation may result in a highly energy and maintenance intensive system that gives rise to excessive noise nuisance frequently.

10 UNMISSABLE TIPS

The proper functioning of your DUCO ventilation system depends entirely on the choice and quality of the exhaust duct system!

Has the duct system been optimized? Seek professional advice from your duct supplier. It saves you time, guarantees quality and provides an energy benefit for the end user!

DISCLAIMER: no rights can be derived from this document. All tips are advisory only. Each contractor may determine at their own discretion which tips are feasible and/or useful, depending on the project.

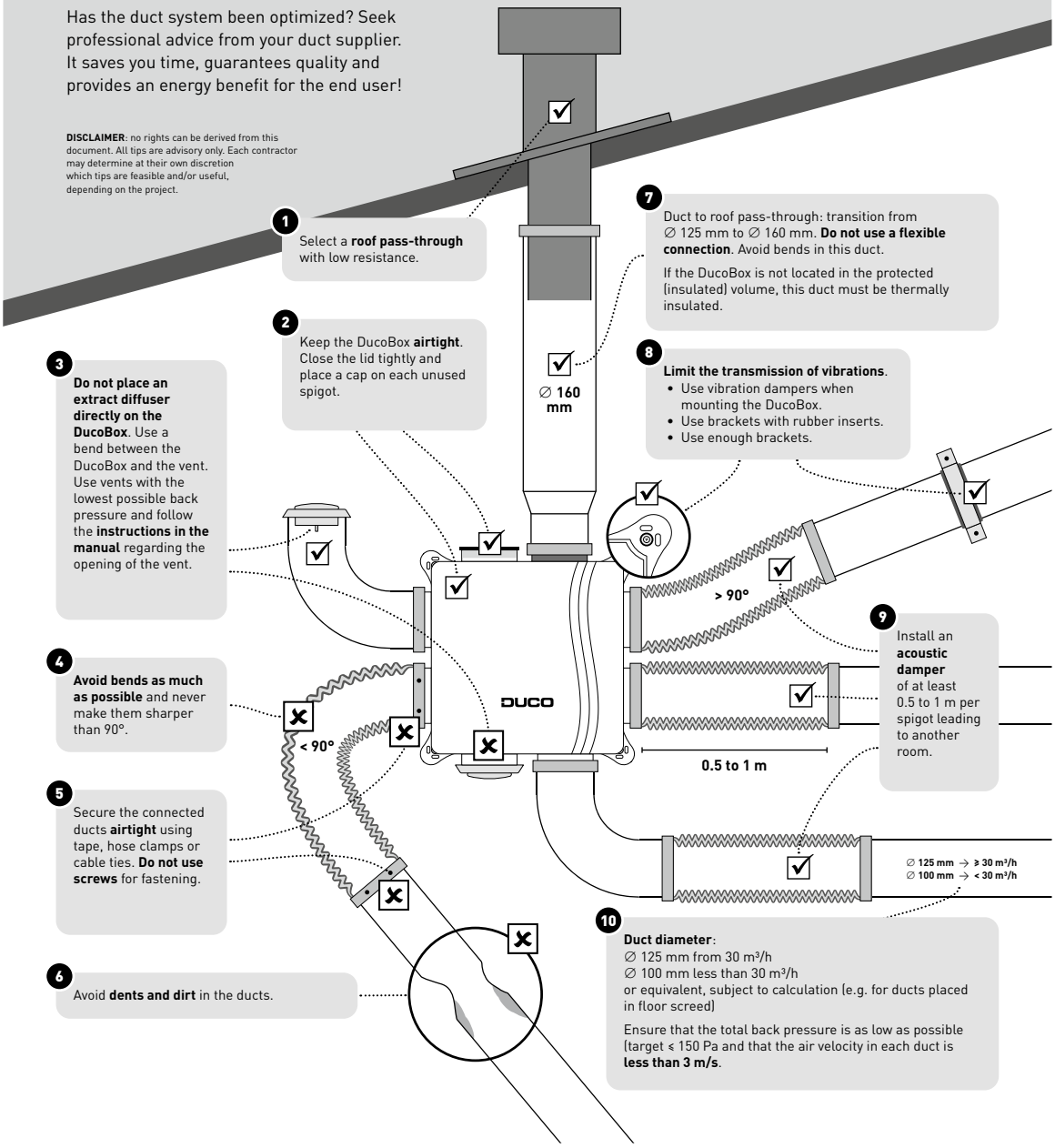

1. Select a **roof pass-through** with low resistance.
2. Keep the DucoBox **airtight**. Close the lid tightly and place a cap on each unused spigot.
3. **Do not place an extract diffuser directly on the DucoBox**. Use a bend between the DucoBox and the vent. Use vents with the lowest possible back pressure and follow the **instructions in the manual** regarding the opening of the vent.
4. **Avoid bends as much as possible** and never make them sharper than 90°.
5. Secure the connected ducts **airtight** using tape, hose clamps or cable ties. **Do not use screws** for fastening.
6. Avoid **dents and dirt** in the ducts.
7. Duct to roof pass-through: transition from ∅ 125 mm to ∅ 160 mm. **Do not use a flexible connection**. Avoid bends in this duct.

   If the DucoBox is not located in the protected (insulated) volume, this duct must be thermally insulated.
8. **Limit the transmission of vibrations**.
   - Use vibration dampers when mounting the DucoBox.
   - Use brackets with rubber inserts.
   - Use enough brackets.
9. Install an **acoustic damper** of at least 0.5 to 1 m per spigot leading to another room.
10. **Duct diameter**:
    ∅ 125 mm from 30 m³/h
    ∅ 100 mm less than 30 m³/h
    or equivalent, subject to calculation (e.g. for ducts placed in floor screed)

    Ensure that the total back pressure is as low as possible (target ≤ 150 Pa and that the air velocity in each duct is **less than 3 m/s**.

04 Communication

04.A Connection & buttons

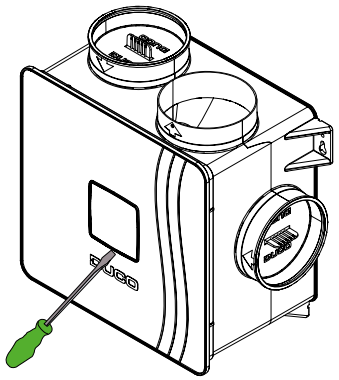

Figure 5: Remove the cover plate of the lid with a screwdriver to gain access to the adjustment buttons.

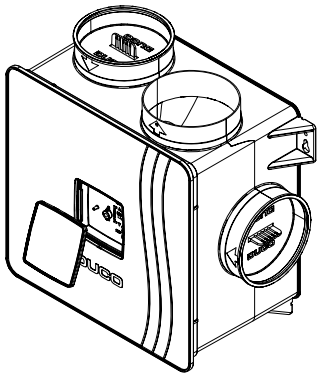

Figure 6: You now have access to the adjustment buttons.

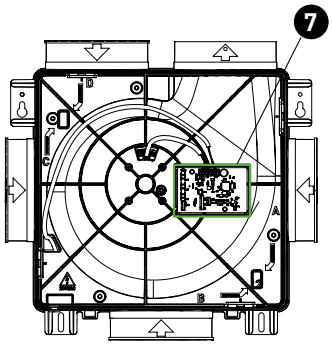

Figure 7: The circuit board is located under the lid.

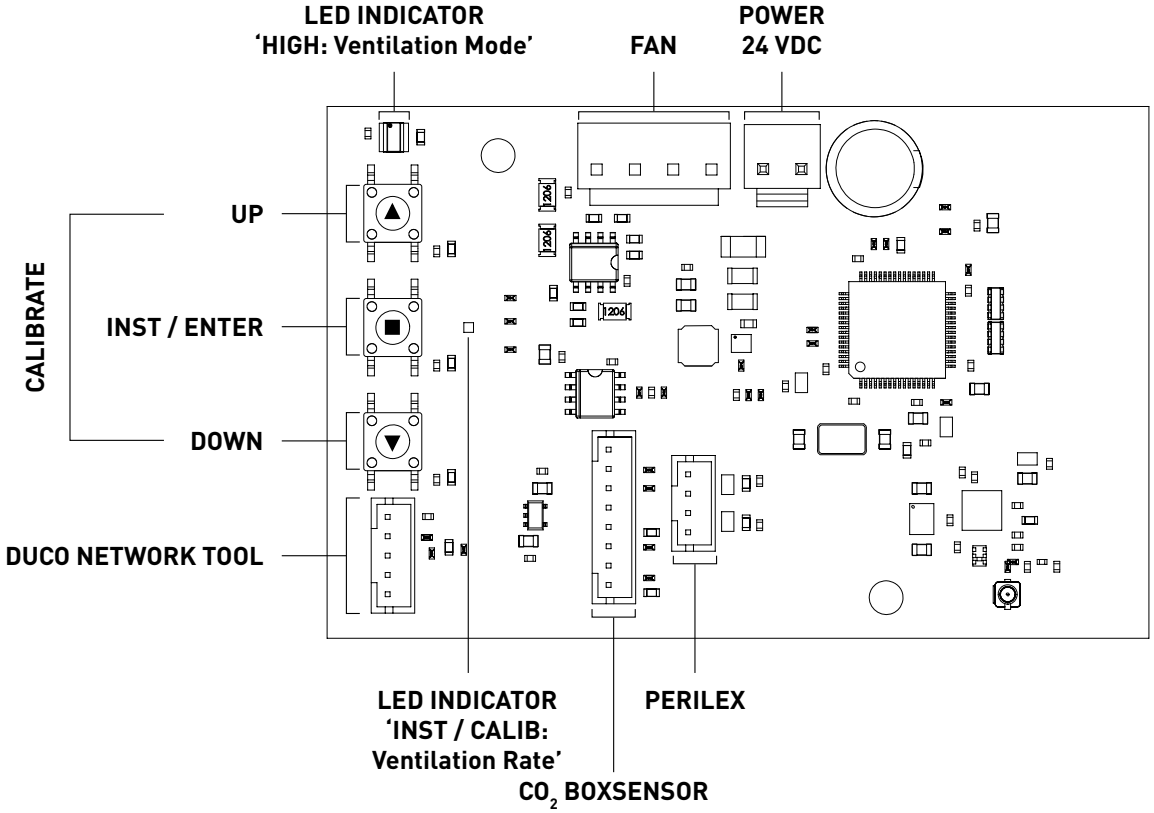

Figure 8: Connections and buttons on the circuit board of the DucoBox Reno UK / IE.

Wireless communication

The DucoBox Reno UK / IE is able to communicate with DUCO slave components via a wireless (RF) connection.

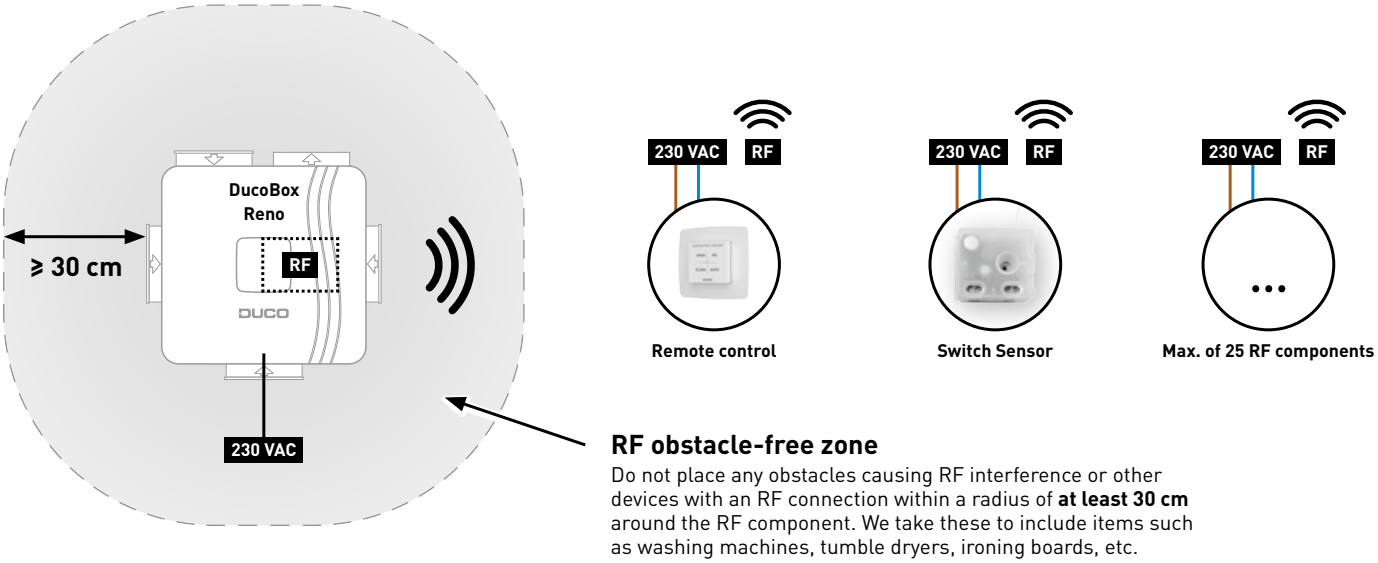

Figure 9: Communication via RF.

RF components have a maximum free-field range of 350 metres. This distance will be much less in a building because of obstacles. Therefore, you will need to take objects such as walls, concrete and metal into account. All components (except those which are battery powered) also act as repeaters. Signals from components that are unable to make a (strong) connection with the controller are forwarded automatically via no more than one other non-battery-powered component (= hop). Please refer to information sheet RF communication (L8000018) at www.duco.eu for further information.

DUCO RF	
Power supply	230 VAC
Wiring	1,5 mm²
Frequency	868 Mhz
Maximum distance	350 m, free field (less through obstacles)
Maximum number of components	Up to 25 wireless components in a single system

05 Additional control option

05.A CO_2 Box sensor

A CO_2 Box sensor can be integrated into a duct port of the DucoBox Reno UK / IE and provide measurement in an air duct. A DucoBox Reno UK / IE can contain **a maximum of one CO_2 Box sensor**.

Installation video CO_2 Box Sensor

CO_2 BOX SENSOR MOUNTING + CONNECTING
1. Disconnect the DucoBox Reno UK / IE from the mains and remove the lid of the DucoBox Reno UK / IE. To do this, first remove the screw located behind the cover plate. (Figure 10: Remove the cover plate and unscrew the lid).
2. Detach the motor plate by unclipping the 4 clamps. To do this, slide a flat screwdriver behind the clamp and tilt it back slightly (approx. 5 mm) so that the clamp is released from the opening in the casing (Figure 11: Detaching the motor plate. and Figure 12: Removing the motor plate.).
3. Secure the CO_2 Box Sensor from the outside in the desired duct port by clicking it into place on the rib closest to the motor plate (Figure 13: Clicking the CO_2 Box Sensor into the duct port). To do this, make a tilting movement by first tightening the lower and then the upper clamp.
4. Pass the cable of the CO_2 Box Sensor through the opening on the inside of the casing at the level of the corresponding duct port. Then pass the cable of the CO_2 Box Sensor through the relevant opening (marked with 'sensor cable') of the motor plate according to the diagram shown below in Figure 14: Four options for cabling a maximum of 1 CO_2 Box Sensor to the circuit board.
5. Attach the motor plate to the casing. The motor plate is fixed when the 4 clamps are engaged in the casing. Make sure that the strain relief of the power cable is pushed into the opening provided for this purpose. The power cable can be attached to the outside of the casing by using the cable clips.
6. Connect the CO_2 Box sensor to the connector (CO_2) on the DucoBox Reno UK / IE PCB (04.A).
7. Mount the lid correctly on the unit. Make sure the notch in the lid is over the power cable opening (Figure 15: Note the notch in the lid). Screw the lid back on and close with the cover plate.

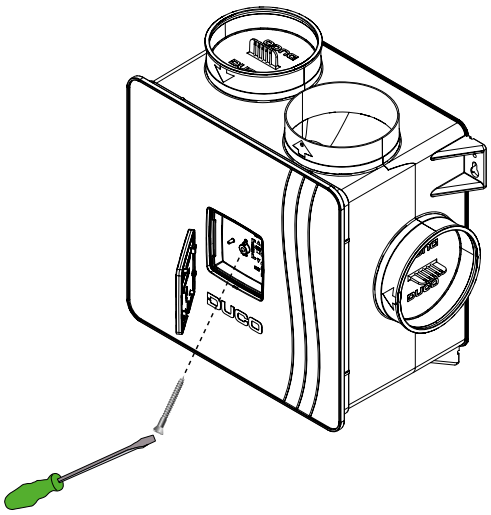

Figure 10: Remove the cover plate and unscrew the lid.

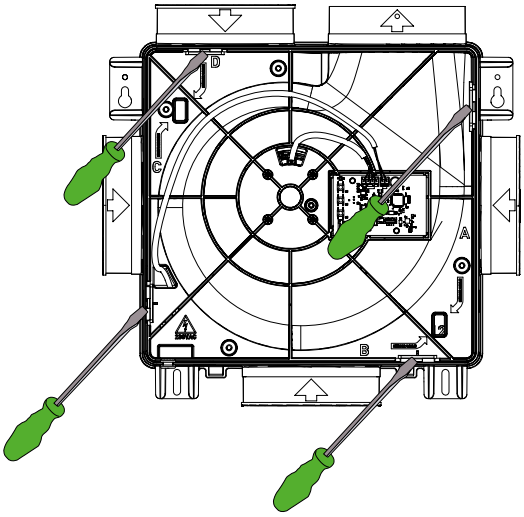

Figure 11: Detaching the motor plate.

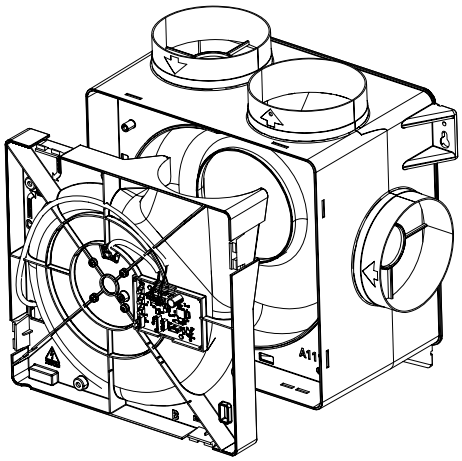

Figure 12: Removing the motor plate.

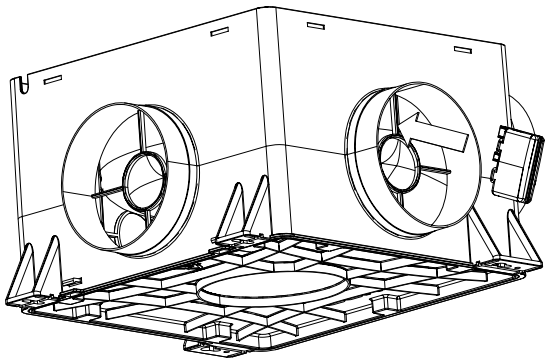

Figure 13: Clicking the CO_2 Box Sensor into the duct port.

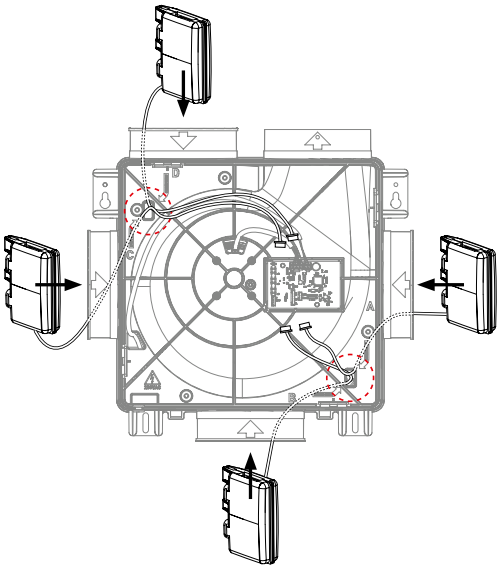

Figure 14: Four options for cabling up to 1 CO_2 Box Sensor to circuit board.

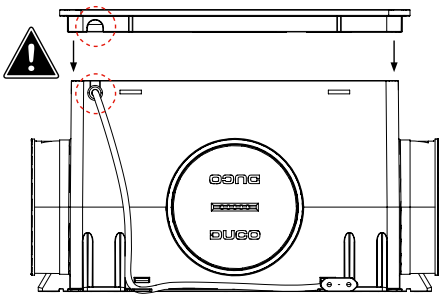

Figure 15: Note the notch in the lid.

06 Electronical installation

06.A Change settings

When using a RH Box Sensor, it is possible to change the Relative Humidity Threshold, so that when the humidity is higher than the set value, the box will speed up from trickle rate to boost rate.

To change the threshold, proceed as follows:
1. Make sure the LED near the 'INST' button doesn't blink.
2. Simultaneously long press the buttons 'UP' (▲), 'DOWN' (▼), and' INST' (■) until the LED near the INST button flashes blue several times.
3. By default, the LED flashes 6 times, corresponding to a threshold value of 60 % relative humidity.
4. You can change the threshold (each push equals a 10 % change):
   - increase the threshold value by pressing the 'UP' (▲) button (up to a maximum of 90 %),
   - decrease the threshold value by pressing the 'DOWN' (▼) button (to a minimum of 30 %).
5. Confirm the change with 'ENTER/INST' (■).

06.B Installer / User mode

To add, remove or replace components to the network, the system should be put in 'Installer mode'. The LED on each component indicates the component's active mode (see table at 06.C in the next section).

Installer mode can be activated by pressing the 'INST' button of the DucoBox Reno UK / IE (see drawing in chapter "04.A Connection & buttons"). When the LED on the controller starts flashing green, Installer mode is active. Press 'INST' again to return to 'User mode' (LED fully on or off). The system reverts automatically to 'User mode' after 15 minutes of inactivity.

06.C LED indications

	RED (blinking slowly) Not in network	**RED (blinking rapidly)** Busy pairing
	GREEN (blinking slowly) In network	**GREEN (blinking rapidly)** In network, waiting for associated components
	YELLOW (clignotement rapide) Transitional phase (please wait)	**YELLOW (on)** Initialising (system configuration in progress)
	WHITE or OFF Normal	
	BLUE Component is displayed if changes are being put through via the controller.	
	ORANGE The system is not working correctly because the DucoBox has not been calibrated. Restart the DucoBox. Follow the guidelines in '10 unmissable tips' if the problem recurs continually.	

06.D Pairing components

Never pair more than one system with RF components at the same time. If you do so, a component in the wrong network could be paired, e.g. in the neighbours' DucoBox.

PAIRING COMPONENTS ON THE DUCOBOX RENO UK / IE
1. Activate 'Installer mode' by pressing 'INST' (■) on the DucoBox. The LED will flash green rapidly.
2. Add control components by pressing once on the component to be paired. The LED will flash red briefly and then start to flash green rapidly. Repeat this step until all remaining components in the current zone have been paired. With RF components: start with the component closest to the controller. If the first pairing is unsuccessful, another component may be tried first, which can then act as a hop for components that are unable to make an RF connection with the DucoBox.
3. Once all components have been paired, 'Installer mode' can be deactivated by pressing 'INST' (■).

Example of a pairing sequence

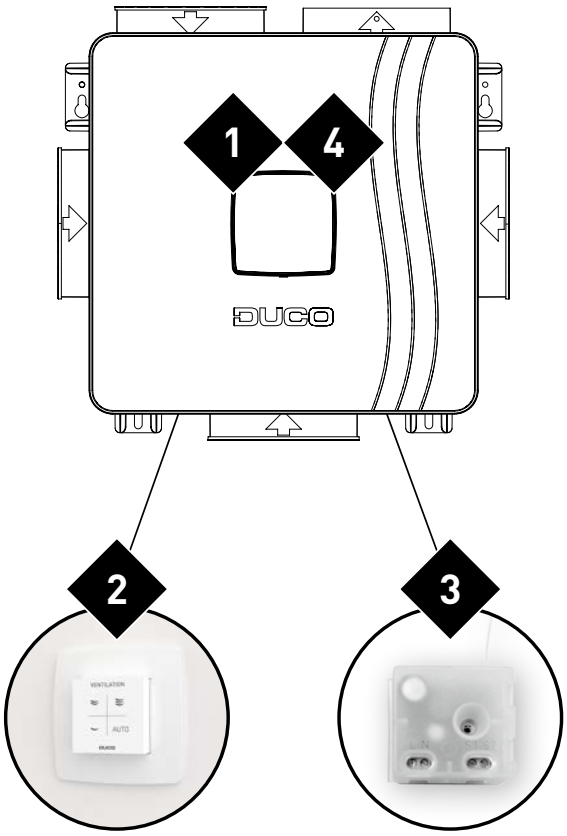

Figure 16: X indicates the order in which to press a component button.

06.E Removing / replacing components

Removing paired components from the network or replacing is only possible within 30 minutes after the component is paired or is restarted. Restarting can be done by disconnecting the power for a moment. After a time span of 30 minutes, remove and replace operations are ignored.

Removing a component

1. Activate 'Installer mode' by **long-pressing 2 diagonal buttons on a paired user controller**. The LED will flash green rapidly.

2. Press **once and hold** a button on the component to be removed in order to remove it from the network.
ATTENTION: any underlying components will also be removed from the network.

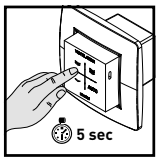

3. Deactivate 'Installer mode' by pressing the 4 buttons on a **paired user controller** simultaneously (or using the palm of your hand on a user controller featuring touch buttons). The LED will turn white.

Replacing a component

1. Activate 'Installer mode' by **long-pressing 2 diagonal buttons on a paired user controller**. The LED will flash green rapidly.

2. Press **briefly twice** on the button of the component to be replaced.

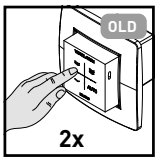

3. **Press once** on the button for the new component. The latter will take on all settings / connections in the network.

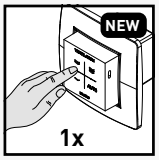

3. Deactivate 'Installer mode' by pressing the 4 buttons on a **paired user controller** simultaneously (or using the palm of your hand on a user controller featuring touch buttons). The LED will turn white.

06.F Tips

Remove all components from the network (e.g. in case of problems):
Activate Installer mode and long press 'INST' until the LED starts flashing red. The DucoBox will reboot (around 15 seconds) and the LED will stop flashing.

Restore commissioning settings of the DucoBox:
To restore the commissioning settings of the
- trickle rate to 50 %,
- the boost rate to 60 %,
- and the purge rate to 70 %.

do the following steps:

1. Activate the 'Adjustment mode' by long pressing the buttons 'UP' (▲) and 'DOWN' (▼), until the LED near the 'INST' button flashes yellow.
2. Then simultaneously press the buttons 'UP' (▲), 'DOWN' (▼), and' INST' (■).

The reset is completed when the LED lights up blue.

07 Air calibration

The system needs to be configured for it to work correctly. This will ensure its operation is as quiet as possible and energy-efficient. See under the Tools heading at www.duco.eu for information about determining ventilation flow rates.

07.A Air calibration procedure for DucoBox Reno UK / IE

The air calibration procedure must be carried out on a calm day (no more than wind force 2: leaves rustling, feeling the wind in one's face).

Calibrating the DucoBox Reno UK / IE

1. Set all exhaust vents so they match the desired flow rate in accordance with the table below. Proper pre-setting makes for rapid and correct calibration.

Flow rate	DucoVent Design	DucoVent Comfort	DucoVent Basic and other vents
75 m³/h		Position 0	**100 %** open
50 m³/h		Position 3	**50 %** open
25 m³/h		Position 7	**25 %** open

When using DucoVent Design exhaust vents, always leave the outer ring in place for acoustic effect.

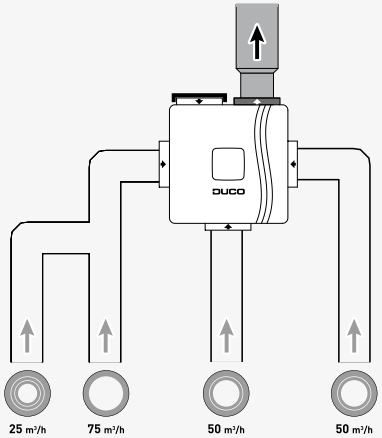

Figure 17: Example situation for calibration.

2. Before activating air calibration mode:
   - Close **all** windows and doors.
   - Ensure that **all duct openings in the DucoBox are fully closed and that the DucoBox lid is closed!**
   - Avoid air leaks in the ventilation ducts.
   - Set all window ventilators to the open position.

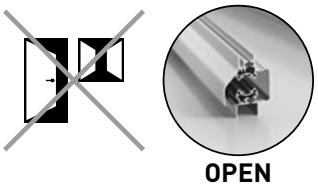

3. Ensure that the lid of the DucoBox is properly closed. Remove the front cover with a screwdriver.

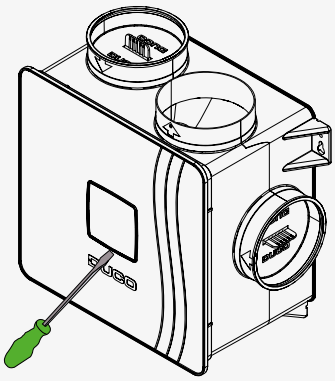

Figure 18: Remove the cover plate of the lid with a screwdriver to gain access to the adjustment buttons.

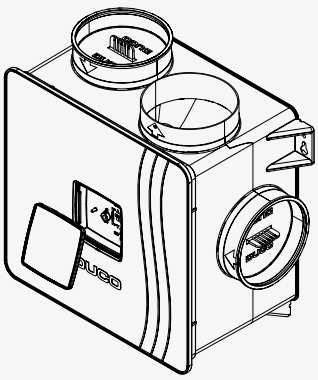

Figure 19: Removing the cover plate.

4

The DucoBox Reno UK / IE has 4 modes: everyday speed (trickle rate), high speed (boost rate) or extra-high speed (purge rate) and AUTO mode. By default, these are set as follows:

- **Trickle rate**: 50 % of maximum power (325 m³/h)
- **Boost rate**: 60 % of maximum power
- **Purge rate**: 70 % of maximum power
- **AUTO**: adjusted rate between trickle rate and boost rate based on moisture and CO_2 measurements

The boost rate and purge rate automatically adjust with the adjusted trickle rate and remain at 10 % and 20 %, respectively, above the trickle rate.

The boost rate can be set lower until it is equal to the trickle rate. The purge rate can be set lower until it is equal to the boost rate.

The flow rates can be adjusted in two ways, either on the box itself (standard method) or — alternatively — via a user controller in a specific room.

On the box itself

1. Long press the 'DOWN' (▼) button to enter the trickle rate setting. You can see that the trickle rate is active when the LED next to the 'HIGH' button blinks once with a 5-second interval. The trickle rate is set to 50 % by default and you will see the LED next to 'INST' flash 5 times. You can change the percentage (each push equals a 10 % change, represented by 1 LED blink):
   - increase the percentage by pressing the 'UP' (▲) button,
   - decrease the percentage by pressing the 'DOWN' (▼) button.
2. Long press the 'UP' (▲) button to enter the boost rate setting. You can see that the boost rate is activated when the LED next to the 'HIGH' button blinks twice with a 5-second interval. Then you can increase or decrease the percentage as in step 1.
3. Optionally — if desired — you can adjust the purge rate by simultaneously long pressing the 'UP' (▲) and 'DOWN' (▼) button. You can see that the purge rate is activated when the LED next to the 'HIGH' button blinks 3 times with a 5-second interval. Then you can increase or decrease the percentage as in step 1.
4. Press 'ENTER/INST' (■) to end the adjustment.

Note: if you decide to adjust the boost rate, there is no longer a link to the trickle rate (no longer 10 % difference). The same principle applies when adjusting the purge rate.

You can always restore the commissioning settings as follows:

1. Activate the 'Adjustment mode' by long pressing the buttons 'UP' (▲) and 'DOWN' (▼).
2. Then simultaneously press these buttons until the LED lights up blue: 'UP' (▲), 'DOWN' (▼), and' INST' (■).

This restores the

- trickle rate to 50 %,
- the boost rate to 60 %,
- and the purge rate to 70 %.

Alternative calibration via a user controller:

1. Long press the button to adjust the desired airflow rate:
   - Trickle rate = 'DOWN' (▼)
   - Boost rate = 'UP' (▲)
   - Purge rate = 'UP' (▲) and 'DOWN' (▼).
2. Now go to a room in the house where there is a user controller and measure the ventilation rate with a flow meter.
3. Adjust the flow rate on the user controller (each push equals a 10 % change):
   - increase the flow rate by pressing
   - decrease the flow rate by pressing
4. Long press AUTO on the user controller to confirm the airflow rate.

5

It is possible to change the Relative Humidity Threshold, so that when the humidity is higher than the default value of 60 %, the box will speed up from trickle rate to boost rate.

To change the threshold, proceed as follows:

1. Make sure the LED near the 'INST' button doesn't blink.
2. Simultaneously long press the buttons 'UP' (▲), 'DOWN' (▼), and 'INST' (■) until the LED near the 'INST' button flashes blue several times.
3. By default, the LED flashes 6 times, corresponding to a threshold value of 60 % relative humidity.
4. You can change the threshold (each push equals a 10 % change):
   - increase the threshold value by pressing the 'UP' (▲) button (up to a maximum of 90 %),
   - decrease the threshold value by pressing the 'DOWN' (▼) button (to a minimum of 30 %).
5. Confirm the change with 'ENTER/INST' (■).

07.B Option: installation of user controller on the DucoBox

To keep the DucoBox and user controllers together during delivery, the option is provided to mount the User controller RF/Bat on the DucoBox Reno UK / IE.

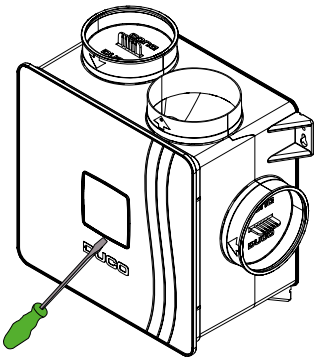

Figure 20: Remove the cover plate of the lid with a screwdriver to gain access to the adjustment buttons.

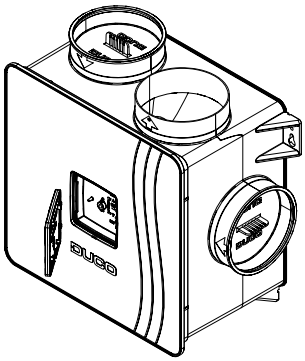

Figure 21: Turn the cover plate over so that the snap-on pieces are on the outside.

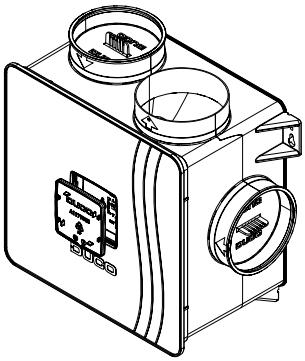

Figure 22: Mount the cover plate back on the DucoBox.

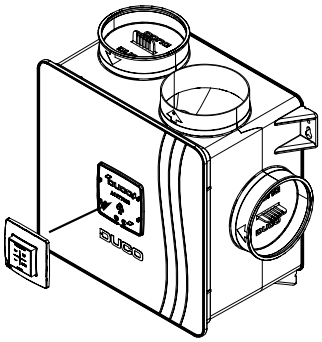

Figure 23: Snap the user controller onto the provided snap-on pieces of the front cover plate.

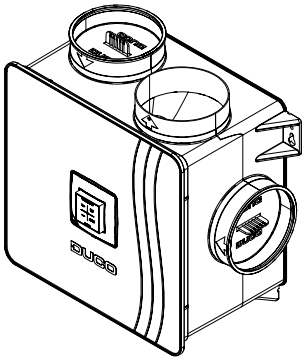

Figure 24: Mounted user controller.

07.C Checking

The steps set out below can be used to check whether the flow rates have been set correctly.

Checking configured flow rate	
1	Remove the cover plate of the lid with a screwdriver to gain access to the adjustment buttons.
2	Long press the button to select the desired airflow rate: • Trickle rate = 'DOWN' (▼) • Boost rate = 'UP' (▲) • Purge rate = 'UP' (▲) and 'DOWN' (▼). The DucoBox will remain in this rate for 30 minutes (by default).
3	Measure the vents. If a flow rate differs from the desired flow rate, it can be adjusted • via the box: 'UP' (▲) or 'DOWN' (▼), • via the user controller: ▲ or ▼.
4	When you are ready, • on the DucoBox, press 'ENTER/INST' (■) • on the user controller, long press AUTO.

08 Maintenance & service

Please refer to the maintenance instructions at www.duco.eu and view the videos on duco.tv for more information.

For service problems as a user:

Please contact your installer. Keep the serial number of your product to hand.

For service problems as an installer:

Please contact your retailer of DUCO products. Keep the serial number of your product to hand.

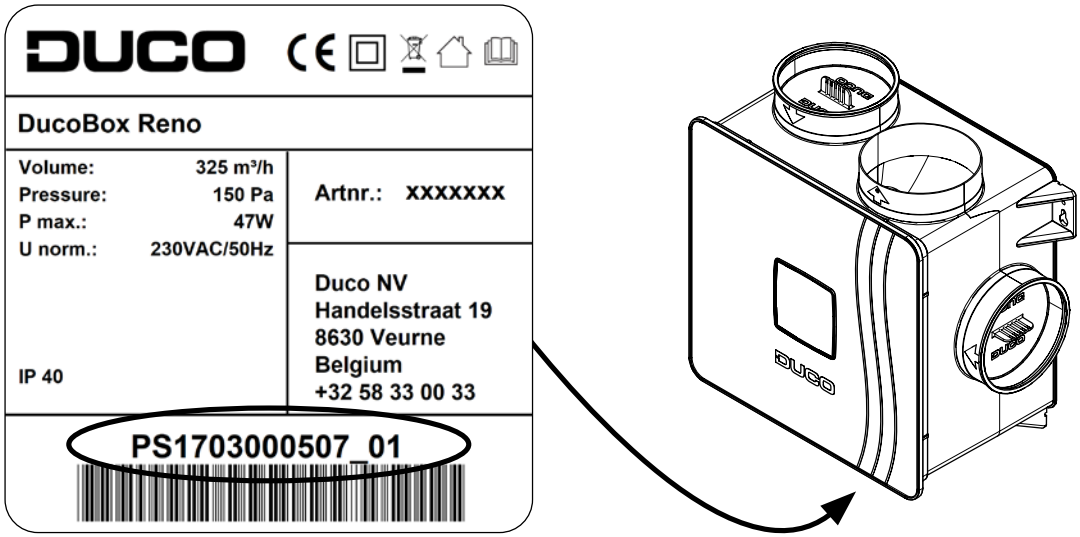

09 Warranty

All warranty conditions concerning the DucoBox and DUCO's ventilation systems can be found on the DUCO website.
All complaints are to be reported to DUCO by the DUCO distributor with a clear description and the order/invoice number under which the products were delivered. To do so, please fill out the complaint registration form, found on the DUCO website, mentioning the serial number and send it to service@duco.eu.

10 Legislation

Product fiche and energy labels can be consulted and downloaded at www.duco.eu.

Simplified EU declaration of conformity

CE Hereby DUCO Ventilation & Sun Control declares that the radio equipment type DucoBox Reno is in compliance with Directive 2014/53/EU.

The full text of the EU declaration of conformity is available at the following internet address:
en.duco.eu/ducobox-reno

Frequency band	868.3 MHz
Maximum radio frequency power	0.4 dBm

Installed by:

L2004970 Document last modified on 01.06.2026 (revision E)