Lo-Carbon Sentinel Econiq Cool-Flow

Installation and User Guide Instructions

Original instruction

Stock Ref. N°

413887 - Sentinel Econiq Cool-Flow Wall Mounted

413888 - Sentinel Econiq Cool-Flow Floor Mounted

PLEASE READ THESE INSTRUCTIONS CAREFULLY BEFORE COMMENCING INSTALLATION OR OPERATION.

PLEASE REFER TO ACCOMPANYING DOCUMENTATION FOR INFORMATION SPECIFIC TO YOUR UNIT.
PLEASE RETAIN THESE INSTRUCTIONS WITH THE PRODUCT.

Copyright © 2025 Vent-Axia. All rights reserved.

- Do not install this product in areas where the following may be present or occur:
  - Excessive oil or a grease laden atmosphere.
  - Corrosive or flammable gases, liquids or vapours.
  - Subject to direct water spray from hoses.
  - Ambient temperatures higher than 40°C and lower than -10°C.
  - Possible obstructions that may hinder access to or removal of the unit.
- All wiring must be in accordance with the current IET wiring regulations BS7671, or appropriate standards of your country. Installation should be inspected and tested by a suitably qualified person after completion.
- Ensure the mains supply (voltage, frequency and phase) complies with the rating label.
- Econiq MVHR unit should be provided with a local double pole fused spur fitted with a 5A fuse having a contact separation of at least 3mm.
- Econiq Cool-Flow Module unit should be provided with a local double pole fused spur fitted with a 13A fuse having a contact separation of at least 3mm.
- Both Econiq MVHR unit & Econiq Cool-Flow Module unit must be earthed.
- Precautions must be taken to avoid the backflow of gases into the building from the open flue of gas or other fuel-burning appliances.
- This appliance can be used by children aged from 8 years and above and persons with reduced physical, sensory or mental capabilities or lack of experience and knowledge if they have been given supervision or instruction concerning use of the appliance in a safe way and understand the hazards involved.
- Children shall not play with the appliance.
- Cleaning and user maintenance shall not be made by children without supervision.
- The installer is responsible for the installation and electrical connection of the Econiq MVHR and Econiq Cool-Flow module system on site. It is the responsibility of the installer to ensure that the equipment is safely and securely installed and left only when mechanically and electrically safe.
- All regulations and requirements must be strictly followed to prevent hazards to life and property, both during and after installation, and during any subsequent servicing and maintenance.
- Both Econiq MVHR unit & Econiq Cool-Flow Module unit condensate drain must be connected to the building's wastewater drainage system.
- Certain applications may require the installation of sound attenuation to achieve the sound levels required.
- The unit must not be connected directly to a tumble drier.
- The supply and exhaust valves must be fully opened prior to commissioning.
- The intake air must be drawn from the exterior of the property.
- The unit should be allowed to stabilise during commissioning for a minimum period of 5 minutes when changing between boost and normal speeds.
- External grilles should be positioned in accordance with your local building regulations, however as a minimum we recommend that the inlet grille is kept 2m from any discharge grille or flue outlet.

UK Building Regulations (Part F/ Technical Handbook 3) Declaration of Conformance

The unit conforms with the 2010 Building Regulation (Part F - Means of Ventilation, F1(1), F(2)) requirements for fixed systems with mechanical extract fans when installed in accordance with the instructions in this document and in accordance with Part F, Part L and TM59 standards.

Contents

Product Description 4
Sentinel Econiq Cool-Flow Technical Specification 5
Verification Testing Data 6
Installation 8
Installation (Wall Mounted and Floor Mounted) 8
Connecting the Power Supply to Econiq MVHR base unit 15
Accessing the Main PCBA 16
Connecting a Boost (Light) Switch from a different circuit, Controllers and Sensors 17
Connecting a Boost (Light) Switch from a different circuit 18
Connections Diagram for Econiq Cool-Flow Module to Mains Supply 19
Mains Connection 21
P-Bus Connection 21
Operationg and Monitoring 22
Initialisation/Loading Screen 22
Serial number on initialisation 22
Overview 23
Display overview – Home screen 23
Home User Menu 24
Display overview – Additional icons 25
Display overview – Mode indicators 25
Display overview – Indoor air quality monitor 26
Display overview – Heat Recovery mode 26
Smartphone Device Pairing and App download 27
Pairing sensors 28
Removing sensors 28
Speed override 29
Heat recovery 29
Schedule 30
Silent hours Mode 30
Summer Bypass 31
Summer Bypass when Cooling Enabled 31
Date / Time 32
Filter reset 32
Warning Screen,Service Interval Remaining,Notifications 33
Advanced menu 33
Advance Menu Overview 34
Advanced menu– Unit handing 34
Advanced menu– Airflow speed setting 35
Advanced menu– Port allocation LS 35
Advanced menu– Port allocation 35
Advanced menu– Proportional Inputs 36
Advanced menu– Service Intervals 36
Advanced menu– Frost Protection mode 37
Advanced menu– Humidity 37
Advanced menu– CO2 threshold 37
Advanced menu– PIN Change 38
Advanced menu– Resets unit to factory defaults (including Handing & Commissioning values) , Retains pairing with HMI and Sensors 38
HMI Hard Reset 39
MVHR Screen – Primary/Additional(Secondary) HMI is not paired with mainboard 39
HMI – Display status when Cooling Active 40
Enabling Cooling with a switch on SW or LS inputs on the Econiq (MVHR) Unit 41
Maintenance 42
Filter Maintenance 42
Periodic Maintenance 43
Important Refrigerant Unit Installation, Servicing and Decommissioning information 44
Spares 49
Diagnosing a Problem 50
Power on Self-Test 53
Accessories 54
Technical Data 55
Radio Equipment Directive (RED) data 55
Flow Rate Settings 55
Frost Protection 55
Use Cases 56
Modbus Registers 57
Summer Bypass Mode and Internal Comfort Temperature for Cooling 58
Input Ports allocation menu 59
Relative Humidity Configuration 61
Fan Performance 61
Product Dimensions 62
Default Settings 63
Product Fiche 64
Disposal 68

Product Description

Designed to mitigate overheating conditions in the warmer months meeting the requirements of Residential Part O and TM59 standards, as well as Part F and Part L. Lo-Carbon Sentinel Econiq Cool-Flow is Vent-Axia's latest flagship mechanical ventilation with heat recovery system combined with our Intelligent Econiq Cool-Flow Module. Designed in the UK, it offers the highest level of comfort and functionality all year round.

In the cooler months the Lo-Carbon Sentinel Econiq Cool-Flow provides up to 93% Heat Recovery ensuring heating bills are kept to an absolute minimum, in the warmer months our Intelligent 100% summer bypass will ensure free cooling is used wherever possible to ensure the internal comfort temperature is not exceeded.

If the fully (100%) automatic intelligent summer bypass is not able to utilise internal/external free cooling conditions to reduce overheating and enable cooling, Vent-Axia's Econiq Cool-Flow will automatically detect excessive increase in temperature within the dwelling. This will operate until the internal dwelling comfort temperature is met to ensure the dwelling does not overheat beyond Part O and TM59 parameters or the comfort temperatures set by the user.

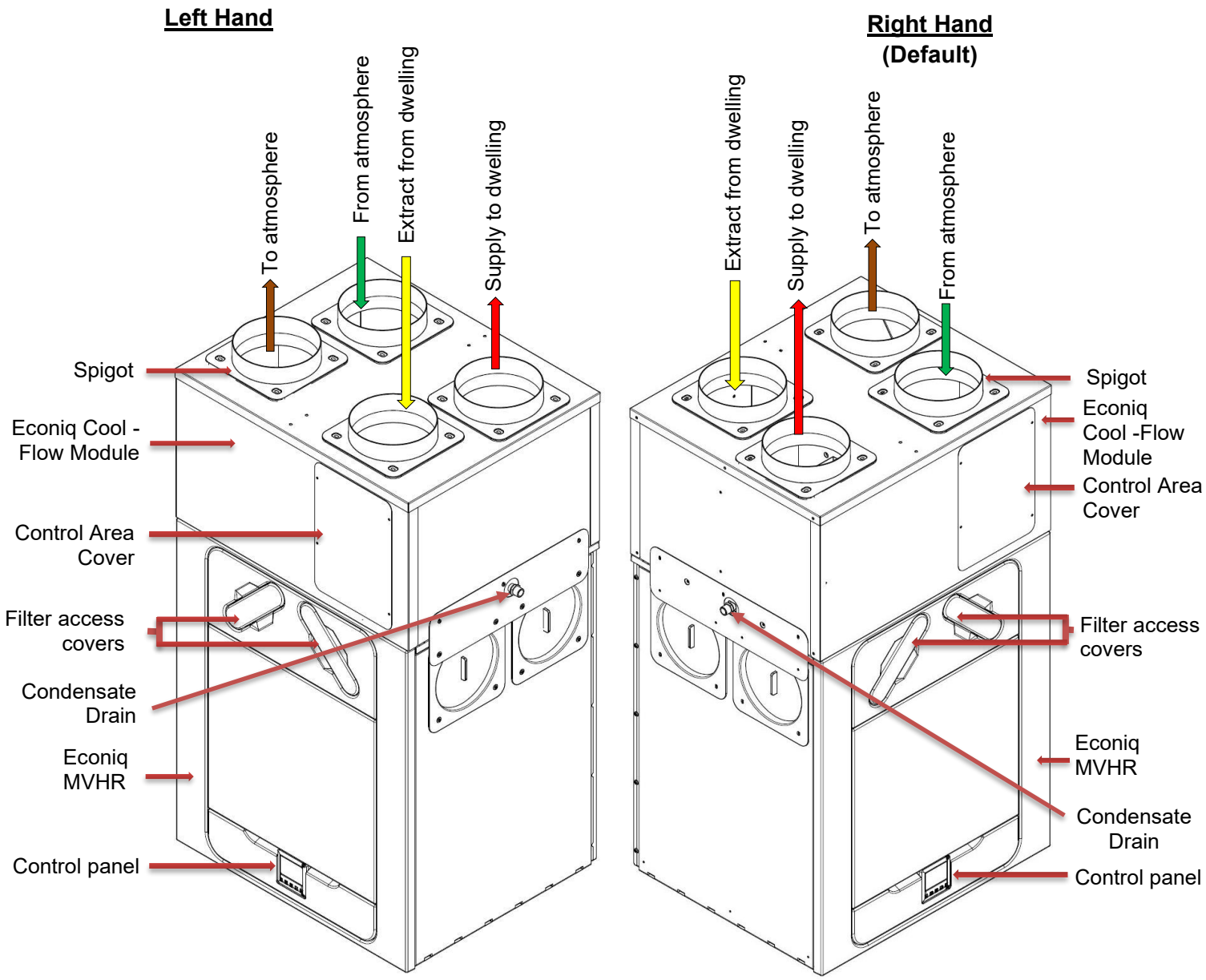

MVHR & Econiq Cool-Flow Module with Left-Hand and Right-Hand (Default) spigot configuration.

Note : Refer to Page 13 for MVHR & Econiq Cool-Flow Module Condensate Drain.

Sentinel Econiq Cool-Flow Technical Specification

Sentinel Econiq Cool-Flow Module (Top Unit)	
Minimum Airflow (nominal)	80l/s or 288m^3/hr
Cooling Capacity	3.2kW (*See Cooling table on Page 6 for further details*)
Cooling Module Power	
AC Voltage Input	220-240 V ac Single Phase
AC Frequency Input	50Hz nominal
Supply Fuse or Cct Breaker	13A
Rated Current	4.82A
Rated Power	1090W
DC Voltage Input	24 V_{DC}, 35mA 840mW 5 V_{DC}, 32mA 160mW
Internal PCB Fuses	
Main Controller PCB	F1: 10A T 250VAC 5x20mm Type: 5H
Environmental	
IP Rating - Unit	IPX2
Operating Temperature	-10°C to +40°C
Operating Humidity	0% to 95% (non-condensing)
Storage Temperature	-10°C to +40°C
Storage Humidity	0% to 95% (non-condensing)
Unit Weight	**48.6kg**

Note : Sentinel Econiq Cool-Flow Module (Top Unit) requires a separate Power Supply.

Sentinel Econiq MVHR (Base Unit)	
Airflow (nominal) Performance	166.67 l/s or 600 m^3/hr
MVHR Power	
AC Voltage Input	220-240 V ac Single Phase
AC Frequency Input	50Hz nominal
Supply Fuse or Cct Breaker	5A
Rated Current	2A
Rated Power	338W
DC Voltage Output	24 V_{DC}, 0.5A 1.2W 5 V_{DC}, 0.5A 2.5W
Internal PCB Fuses	
Main Controller PCB	F1: 2A T 250V
Environmental	
IP Rating - Unit	IPX2
Operating Temperature	-10°C to +40°C
Operating Humidity	0% to 95% (non-condensing)
Storage Temperature	-10°C to +40°C
Storage Humidity	0% to 95% (non-condensing)
Unit Weight	**44.4kg**

Note : Sentinel Econiq MVHR (Base Unit) requires a separate Power Supply.

Verification Testing Data

External Conditions		Internal Conditions				Econiq Cool-Flow Module				Econiq Cool-Flow			
Dry Bulb Temp (°C)	Wet Bulb Temp (°C)	Dry Bulb Temp (°C)	Wet Bulb Temp (°C)	Airflow (l/s)	Supply Air Temp (°C)	Power In (kW)	Sensible Cooling Capacity (kW)	Total Cooling Capacity (kW)	EER	Power In (kW)	Sensible Cooling Capacity (kW)	Total Cooling Capacity (kW)	EER
* 35	24	27	19	83	17.46	1.07	1.67	2.13	1.99	1.11	1.80	2.39	2.15
				111	17.57	1.02	2.19	2.71	2.65	1.11	2.39	3.21	2.89
				139	17.98	0.99	2.65	3.18	3.23	1.14	2.91	3.83	3.36
				167	18.00	0.96	3.14	3.75	3.92	1.16	3.49	4.37	3.77
31	22	27	19	83	15.88	0.93	1.50	1.83	1.96	1.07	1.55	2.06	1.93
				111	16.11	0.98	1.98	2.40	2.45	1.08	2.04	2.62	2.42
				139	16.39	0.95	2.43	2.75	2.90	1.09	2.49	3.12	2.86
				167	16.47	0.93	2.47	3.10	3.34	1.12	2.97	3.72	3.32
** 27	19	27	19	83	13.54	0.98	1.43	1.67	1.70	1.01	1.38	1.69	1.68
				111	13.55	0.93	1.92	2.28	2.45	0.98	1.85	2.31	2.36
				139	14.18	0.91	2.31	2.48	2.72	1.03	2.20	2.52	2.45
				167	14.63	0.88	2.72	2.92	3.32	1.08	2.54	2.97	2.76

* ErP & BS EN 13141-7:2021 Cooling performance test conditions

** BS EN 13141-7:2021 Cooling performance test condition

Overview

Inspecting the Product

When taking delivery of the product, check the items delivered against the delivery note insert and inspect for damage in transit. Each consignment contains a heat recovery unit, a cooling module, a wall or floor mounting kit (depending on the order part number).

Unit Installation

Installation should be carried out by a suitably qualified and competent person.
The unit should only be installed using the manufacturers wall or floor mounted kit as supplied. The wall or floor must have sufficient strength to support both the Econiq MVHR & Econiq Cool-Flow Module with a **total weight of approximately 100kg**.
Always ensure that the unit is mounted upright and level.
Please see the Wall or Floor Mounting Kit leaflet for more information.
Do not use this unit as a support for any other equipment.

Service Void

Clearance must be left around the unit to allow for cleaning and servicing, the dimensions below are the minimum requirements. The condensate drain trap used will dictate the necessary clearance below the unit which may be greater than the minimum detailed below.

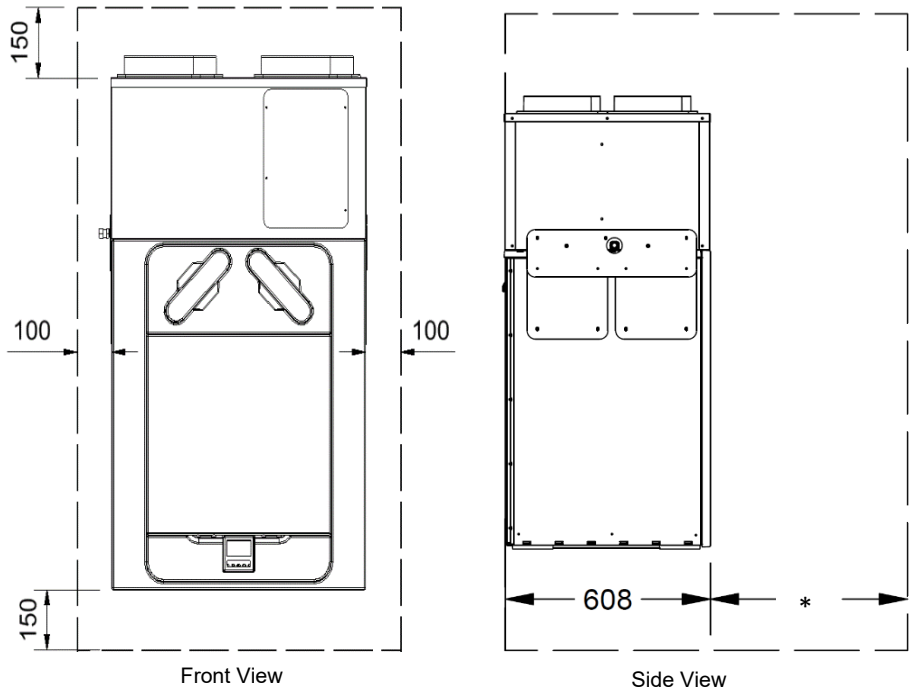

*** Minimum clearance required to remove Control Panel Cover.**

Select Unit Configuration

The unit is configurable as either Left or Right-Handed (RH by Default), see page 4 for the spigot configuration.
On the Econiq MVHR unit use the Left-hand condensate drain for the Left-Hand configuration, the Right-hand drain for the Right-Hand configuration. See Page 8 (Step 3) for more details.
On the Econiq Cool-Flow Module there is only one condensate drain connection that should be connected.

Before installation of the Econiq MVHR unit

We advise installers to fix all mains and sensor wiring prior to fixing the Econiq MVHR unit in position, leaving a minimum distance of 2m tails to allow for internal routing.

Before installation of the Econiq Cool-Flow Module

We advise installers to fix mains wiring on the Econiq Cool-Flow Module top unit prior to mounting the Econiq Cool-Flow Module on top of the Econiq MVHR unit, leaving final connections until the units are fixed together.

Installation (Wall Mounted and Floor Mounted)

Ensure both the Econiq Cool-Flow Module top unit and Econiq MVHR base unit are disconnected from any Mains power.

Step 1: Remove the duct spigots from the top of Econiq MVHR base unit (discarding the rubber seals and fixing screws) and replace with 10mm thick self-adhesive foam circular seals (provided loose).

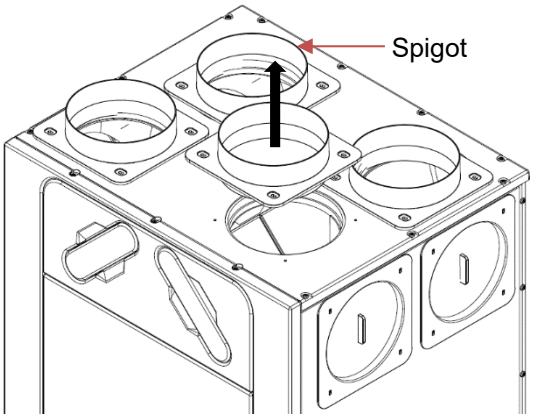

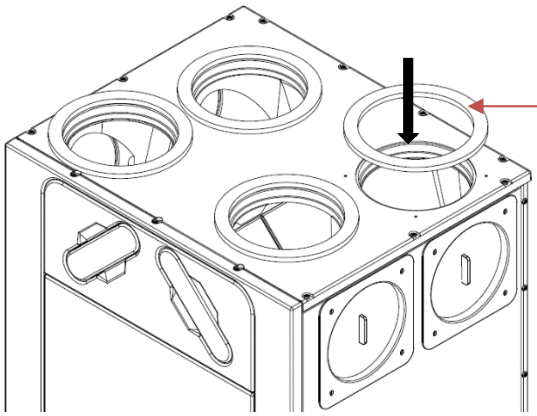

Step 2: Fit the loose duct spigots on top of the Econiq Cool-Flow Module unit, using the M4 screws provided as shown.

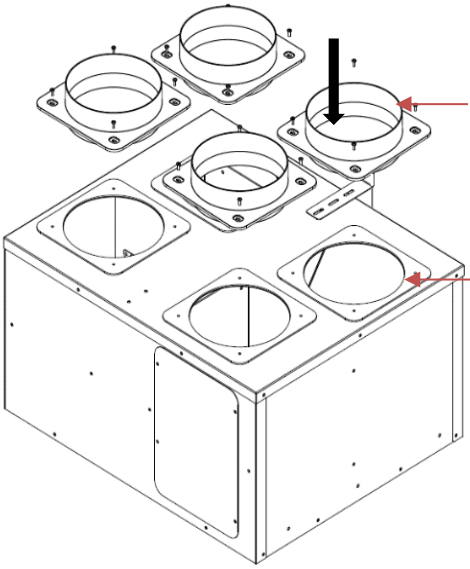

Step 3: Select Unit Configuration

Both the Econiq Cool-Flow Module and Econiq MVHR are configured Right Hand as default.
The units are configurable as Left Hand on site. The Econiq Cool-Flow Module top unit is labelled as RH and LH next to the control area covers as shown below.

To Configure as a Left Hand Unit:

1. See page 4 for the Left Hand spigot configuration and insure the installation ductwork is aligned with the correct spigots.
2. On the Econiq MVHR base unit use the Left-hand condensate drain for the Left-Hand configuration, (the Right-hand drain is for the Right-Hand configuration). Ensure the un-used condensate drain is fitted with the screwcap supplied.
3. On the Econiq Cool-Flow Module top unit, remove the front and rear control area covers and retain the covers and screws.

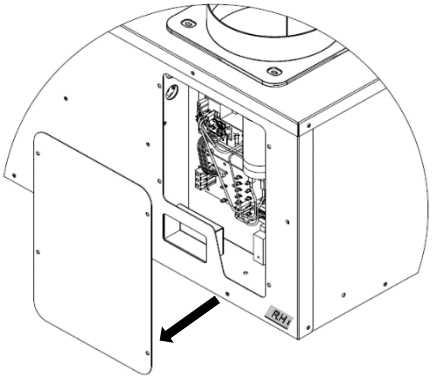

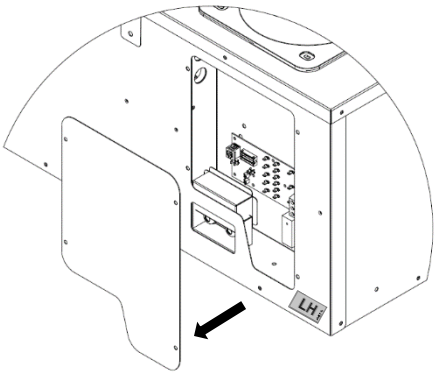

4. In the front control area (RH), disconnect the Blue and White cables from the lower PCB marked “Capacitor”, the Brown and Red cable from the lower PCB marked “L Out” and “L SW” and disconnect the Multi cable plug from the lower PCB marked “LOCAL”.

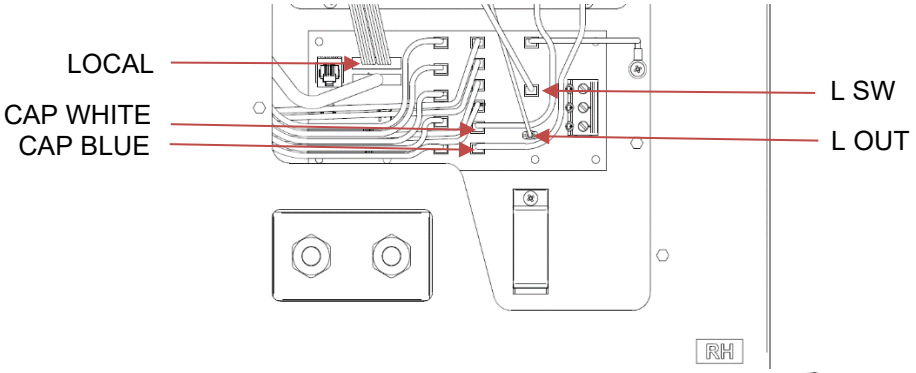

5. Remove and retain the 4 x fixings holding the upper plate, mounting the Main Board, Power Relay and Capacitor, and relocate to the rear control area (LH) and fit using the retained 4 x fixing screws.

6. In the rear control area (LH), remove the terminal spade covers from the lower PCB and fit to the same spade terminals in the front (RH) PCB.

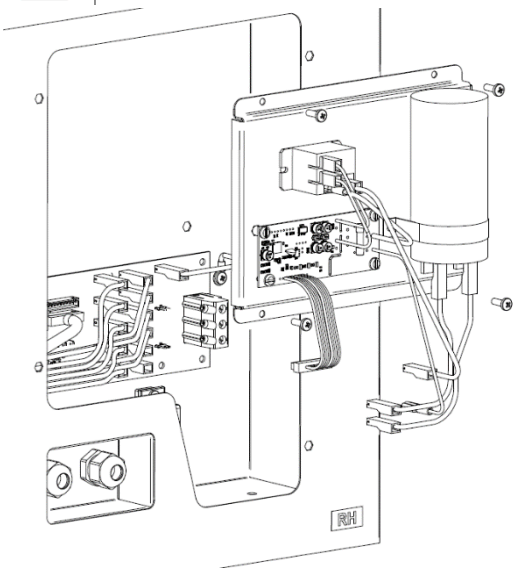

7. In the rear control area (LH) connect the Blue and White cables to the lower PCB marked “Capacitor”, the Brown and Red cable to the lower PCB marked “L Out” and “L SW” and connect the Multi cable plug to the lower PCB marked “LOCAL”.

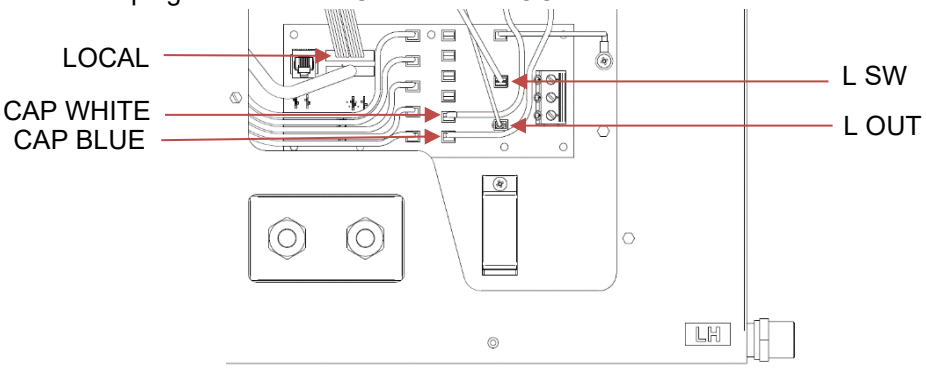

8. Refit the (LH) Control area cover.
9. Rotate the Econiq Cool-Flow Module top unit so as the LH sticker is facing forwards.
10. The Econiq Cool-Flow Module top unit condensate drain connection will now be on the right hand side.
11. Ensure that the Econiq MVHR base unit condensate drain connection will now be on the Left Hand Side.
12. When commissioning the Econiq MVHR base unit select “L” in Unit Handing Menu (see page 34 – Operating and Monitoring – Engineering Menu).

*Refer to the Wiring Diagram Configuration on page 18,19 &20.

Wall Mounting

Step 4: Fit and Install the Wall Bracket as described in the 415224 leaflet.

Mount the Econiq Cool-Flow Module (**weight 44.4kg**) on top of the Econiq MVHR base unit (**weight 48.6kg**), taking care not to damage the seals around the airpath ducts.

Mount the combined unit safely on the wall bracket as mentioned in the 415224 leaflet.

Note: Before mounting the combined unit on the wall bracket, ensure the **total weight of the unit 93kg** is considered.

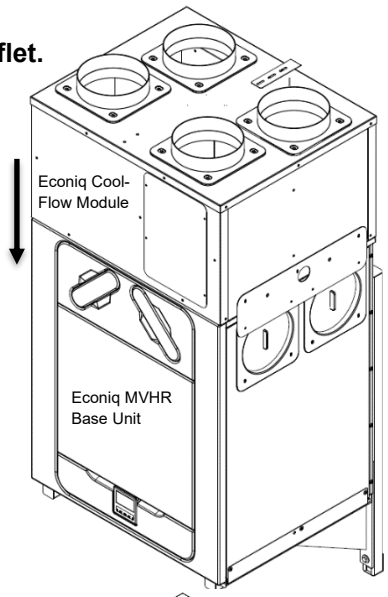

Floor Mounting

Step 4: Fit and Install the Floor Stand as described in the 415225 leaflet.

Mount Econiq Cool-Flow Module (**weight 44.4kg**) on top of the Econiq MVHR base unit (**weight 48.6kg**), taking care not to damage the seals around the airpath ducts.

Mount the combined unit safely on the floor stand as mentioned in the 415225 leaflet.

Note: Before mounting the combined unit on the floor stand, ensure the **total weight of the unit 93kg** is considered.

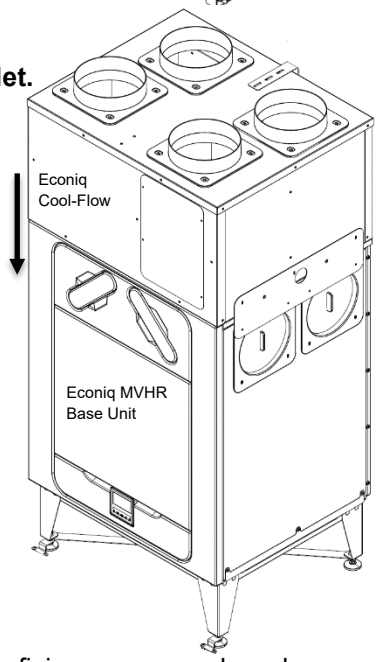

Both Mounting Methods

Step 5: On both sides of the Econiq MVHR base unit, remove the 4 x top fixing screws and washers as shown from the air duct blanks and retain.

Fit the side brackets to the Econiq Cool-Flow Module top unit using the M4 screws provided in the Accessory Pack. Fit the side brackets to the Econiq MVHR base unit using the retained screws and washers.

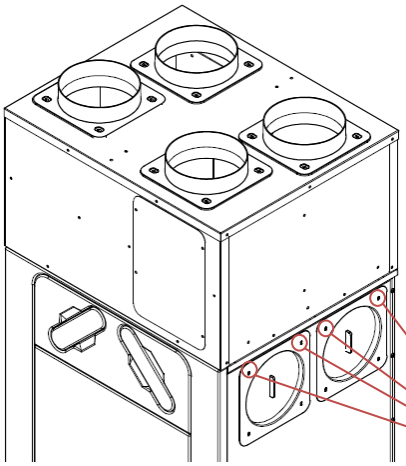

Side bracket

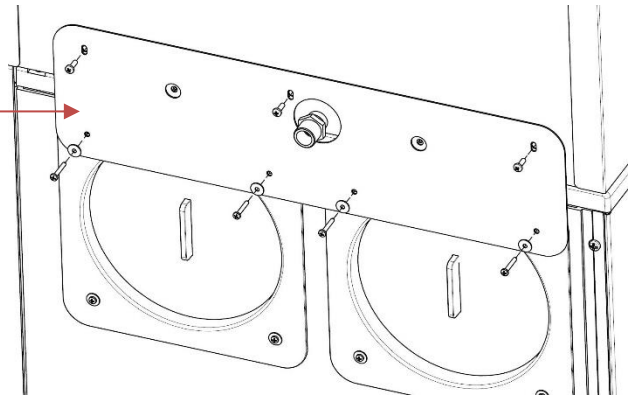

4 x top fixing
Screws &
Washers

Step 6: Remove, rotate and replace the Anti Tilt Bracket on top of the Econiq Cool-Flow Module top unit. Ensure the round screw holes face towards the wall. Leave the bracket loose to allow adjustment later.

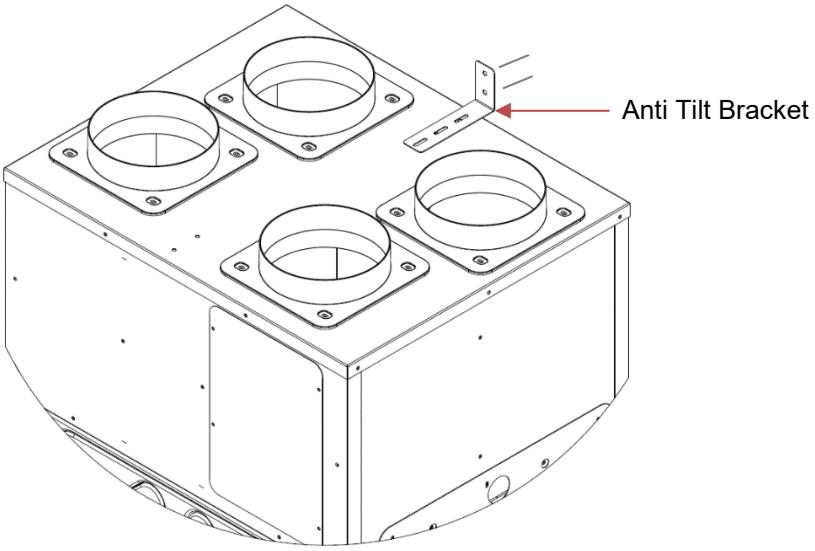

Step 7: On the rear of the Econiq Cool-Flow Module top unit, remove the 4 x fixing screws and the cover from the control area as mentioned in the Step 3 (if not already removed for LH orientation) and retain the cover and screws.

At the rear of the Econiq Cool-Flow Module top unit, feed the Cat6 cable (pre-fitted to the Econiq MVHR base unit) through left hand M20 gland. Route the cable around and through the cable retention clamp, then looping it back through the retention clamp as shown in Step 8.

Ensure the cable aligns with the correct diameter of retention gap in the clamp for the Cat6 cable diameter. Route the cable to the P-Bus connection on the (lower) Interface Board and connect the Cat6 data cable into the Interface Board P-Bus connection, as identified on the connections diagram, but leave the cable retention clamp loose at this point.

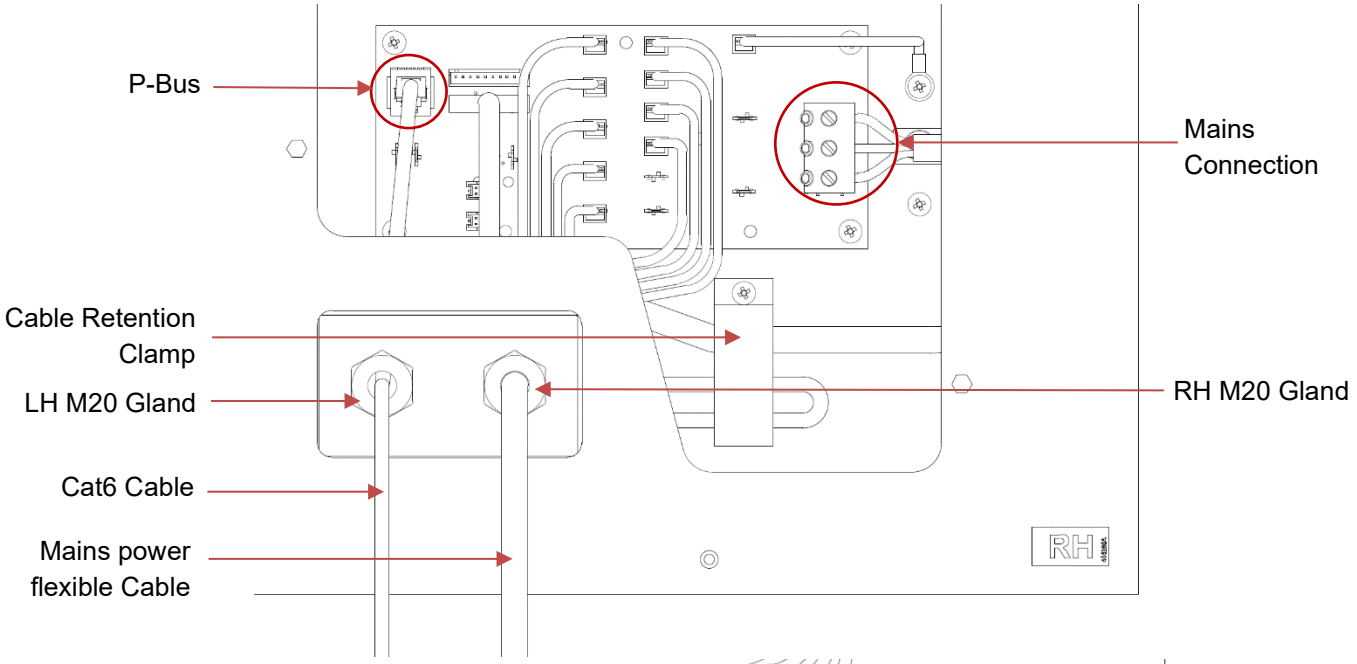

Step 8: On the rear of the Econiq Cool-Flow Module top unit, using the 3 core flexible cable (supplied), feed the end (without the core identification label) through the right hand M20 gland as shown above.

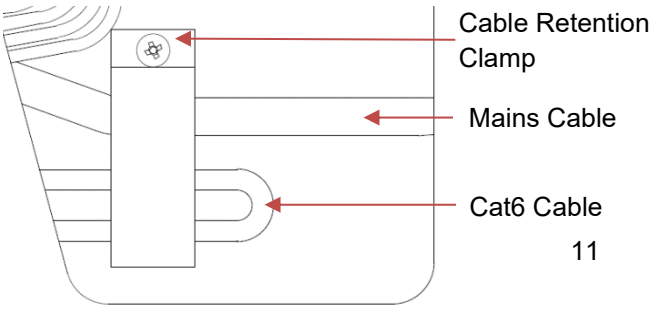

Route this cable through the same cable clamp as the data cable, ensuring the cable is sited on the clamp for the diameter of the 3 core mains power flexible cable, but leave the cable retention clamp loose at this point.

Terminate the 3 core flexible cable into the screw terminals marked ‘L’, ‘N’ and ‘Earth symbol’ on the lower interface board, as per the connections diagram on page 18.

Ensure the Cat6 and 3 core, mains power flexible cable are aligned on the correct part of the cable retention clamp for the diameter of the cables and clamp into place using the top clamp screw (fitted). Ensure both cables are securely held by the cable retention clamp.

Tighten all M20 glands by hand until the gland seal is secure around the cable(s) diameter. Use a suitable tool to tighten the gland(s) up by an additional partial turn.

Wall Mounting

Step 9: Align the assembled units with the arms of the wall bracket. Raise the assembled units up to just above the level of the wall bracket arms and manoeuvre the lifting machine with the assembled units back towards the wall as shown, ensuring that the installed Cat6 and Mains cables are not damaged.

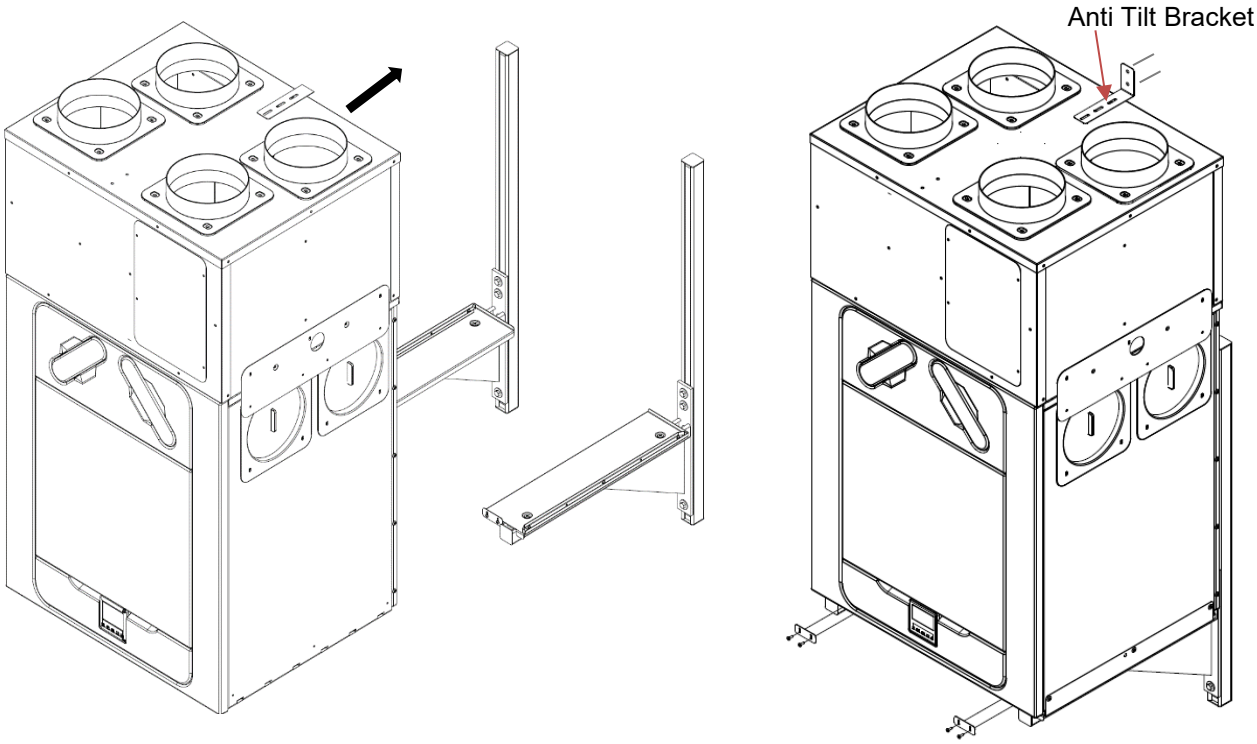

When the feet of the Econiq MVHR base unit align with the back “end stops” on the wall bracket arm top plates, slowly lower the assembly ensuring that all four feet of the Econiq MVHR base unit align with the wall mounting bracket arm top plates. Fit the wall mounting bracket arm front “end stops”, to ensure the unit cannot slide forwards as shown above.

At the top of the Econiq Cool-Flow Module, push the loosely held anti-tilt bracket to the wall and mark for drilling the fixing holes. Drill and fix Wall plugs (supplied) and screw anti-tilt bracket to the wall, using the screws provided in the Accessory Pack. On the top of the Econiq Cool-Flow Module top unit, tighten the anti-tilt bracket M4 hold down screws.

Fit the Econiq MVHR base unit screws (supplied) in 4 positions, through the wall mounting bracket arm top plates into the holes on the Econiq MVHR unit side panels.

Note: Please ensure the unit is level.

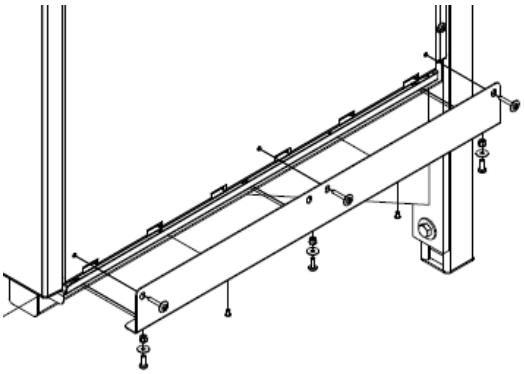

Floor Mounting

Step 9: Push the assembled units, on the floor stand, back towards the wall, ensuring that the installed Cat6 and Mains cables are not damaged.

At the top of the Econiq Cool-Flow Module, push the loosely held anti-tilt bracket to the wall and mark for drilling the fixing holes. Drill and fix Wall plugs (supplied) and screw anti-tilt bracket to the wall, using the screws provided. On the top of the Econiq Cool-Flow Module top unit, tighten the anti-tilt bracket M4 hold down screws.

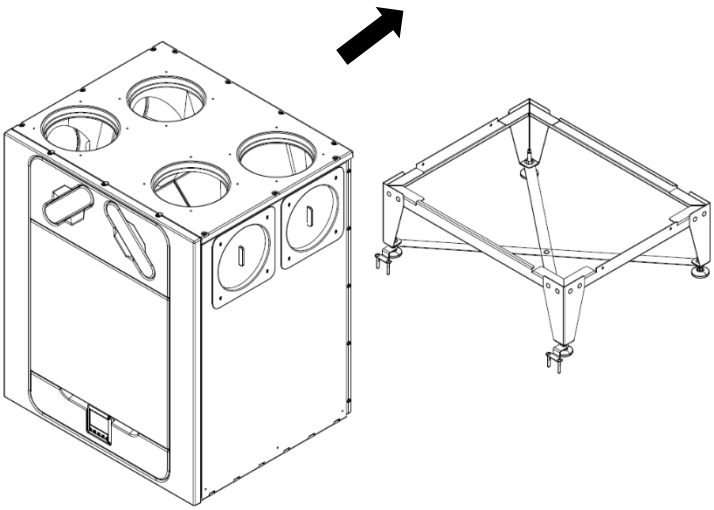

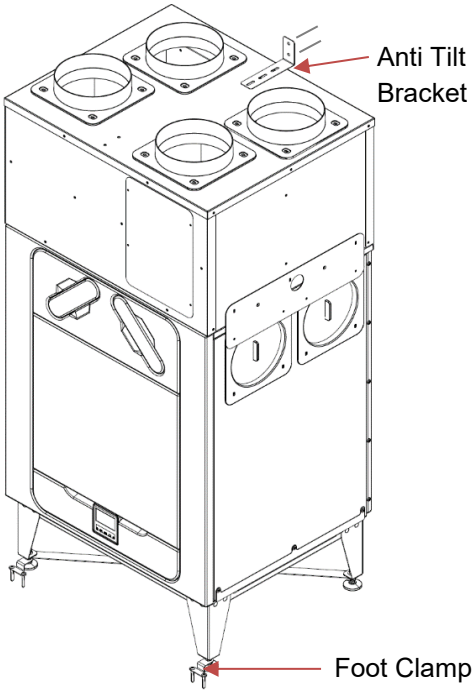

Locate the loosely held foot clamps and drill/fix using the supplied fixings as shown above.

Econiq Cool-Flow Module

Step 10: On the Econiq Cool-Flow Module, locate the threaded condensate pipe on the side of the unit. Wrap a suitable amount of PTFE tape (not supplied) around the thread and fit a ½'' BSP elbow (not supplied) to the thread. Fit a suitable length of pipe to suit elbow fitting chosen (not supplied) to drop vertically from the ½" BSP elbow to a suitable condensate trap (not supplied) and drain.

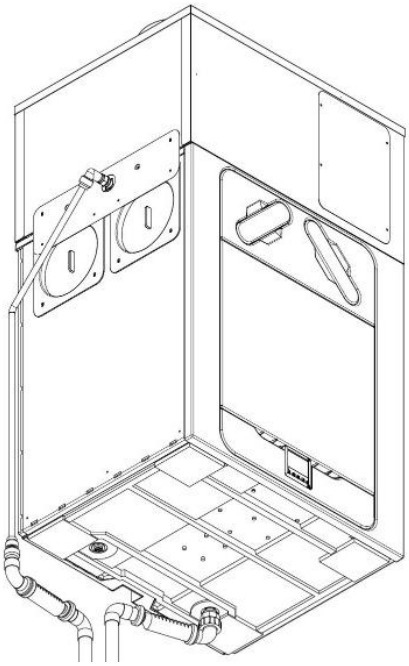

Econiq MVHR Unit

On the Econiq MVHR, depending on the handling of the unit, remove the required condensation blanking cap and fit the supplied condensation outlet adaptor to the unit first. A trap must be fitted between the condensate drain of the unit and the rest of the waste system. A waterless trap is recommended, as they are not susceptible to drying out during warmer periods when no condensate is formed.

If a conventional trap is used, a trap with a minimum water seal of 60mm must be selected. The condensate outlet is compatible with 32mm threaded waste pipe fittings. We would recommend that the condensate pipes have a 3 degree minimum fall to allow the water to drain away from the unit naturally. In areas where freezing eather conditions occur, outlet pipes must be insulated to avoid blockage by ice, which may cause damage to the unit and surroundings.

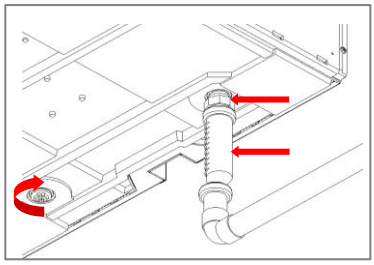

Note: Separate traps must be provided for the Econiq MVHR base unit and Econiq Cool-Flow Module top unit, after the seperate traps, the waste water can be combined.

Step 11: Connect the ductwork system (by others) to the top of the Econiq Cool-Flow Module spigots (200mm Ø) in the correct placement, as directed below (Left Hand and Right Hand Configuration).

Use insulated flexible or rigid duct. If using flexible duct this should not exceed 500mm in length, please refer to your local building regulations. For flexible ducting, ensure it is securely attached to the spigots using worm-drive clips or suitable plastic ties. Insulate all ducting to prevent any cold/heat losses or surface condensation. All ducting should be installed in accordance with your local building regulations and best practice.

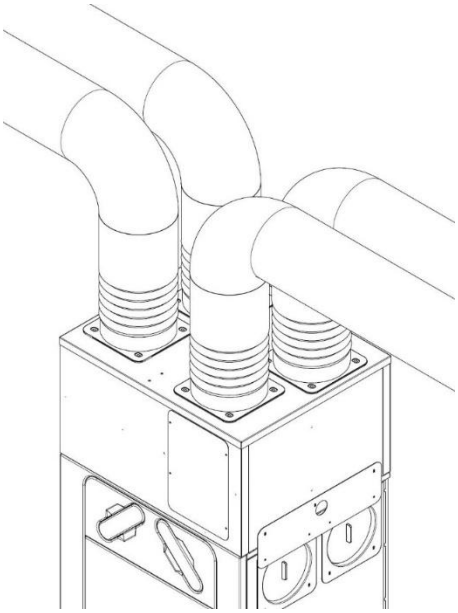

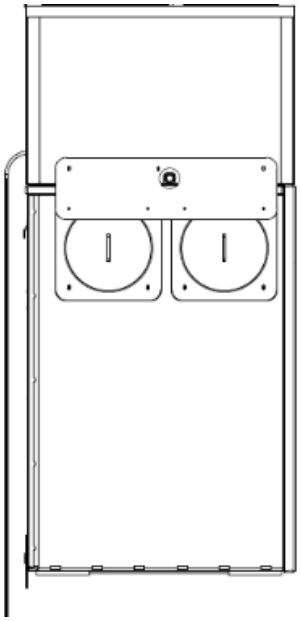

Step 12: Wire the Econiq Cool-Flow Module top unit 3 core flexible cable to a local fused connection unit, fused at 13A.

Step 13: Wire the Econiq MVHR base unit 3 core flexible cable to a local fused connection unit, fused at 5A.

Step 14: Refer to page 22 and the section for “Powering Up the Unit”.

Accessory Pack for the Unit

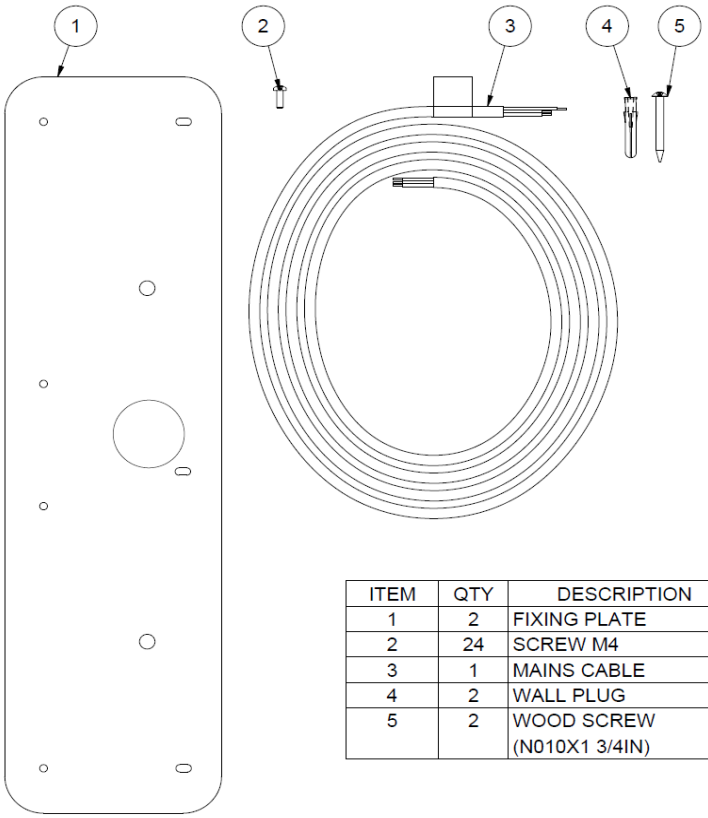

ITEM	QTY	DESCRIPTION
1	2	FIXING PLATE
2	24	SCREW M4
3	1	MAINS CABLE
4	2	WALL PLUG
5	2	WOOD SCREW (N010X1 3/4IN)

Connecting the Power Supply to Econiq MVHR base unit

WARNING

1. **MAINS SUPPLY VOLTAGES (220-240V AC) ARE PRESENT IN THIS EQUIPMENT, WHICH MAY CAUSE DEATH OR SERIOUS INJURY BY ELECTRIC SHOCK. ONLY A SUITABLE QUALIFIED PERSON SHOULD CONNECT THE POWER SUPPLY TO THIS UNIT.**
2. **THIS UNIT MUST BE CORRECTLY EARTHED.**
3. **ALL EXTERNAL WIRING MUST BE FIXED WIRING.**

This unit is designed for operation from a single-phase alternating current source (220-240V AC).

A 1.5m cable is connected internally to the unit for connection to an isolator switch.

If the supply cord is damaged, it must be replaced by a special cord or assembly available from the manufacturer or its service agent.

To connect the power supply:

Ensure the local AC power supply is switched off.

One end of the power cable has already been terminated within the unit.

Connect the other end of the cable to a switched fused spur as shown.

The switch fused spur needs to be 5A.

Connecting a Boost (Light) Switch - MVHR

A Switched Live LS may be used to boost the airflow when a light is turned on, for instance in a bathroom or kitchen. (The unit can be switched to boost by applying 220-240V to the LS input).

If the LS core of the mains cable is not used it should be terminated in an appropriate manner.

The LS connection should only be used if the switch live is on the same circuit as the unit.

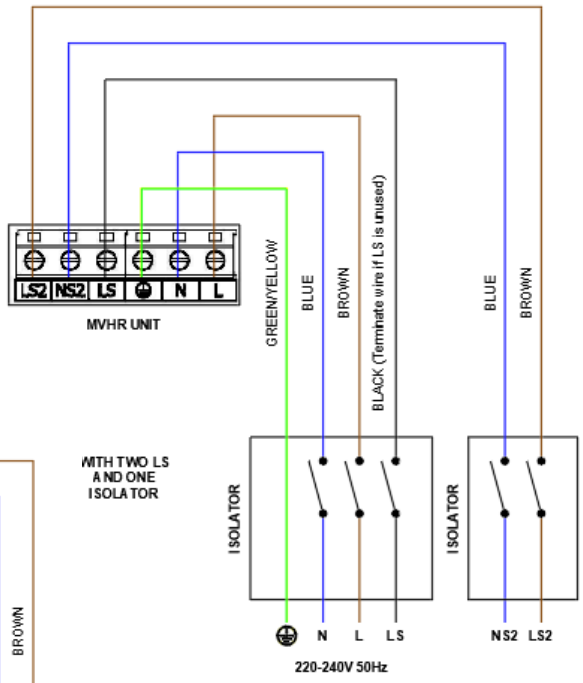

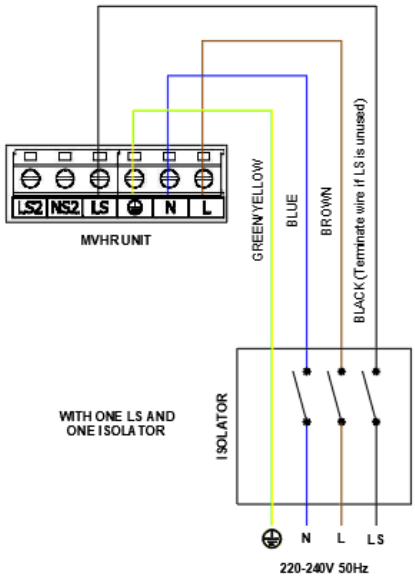

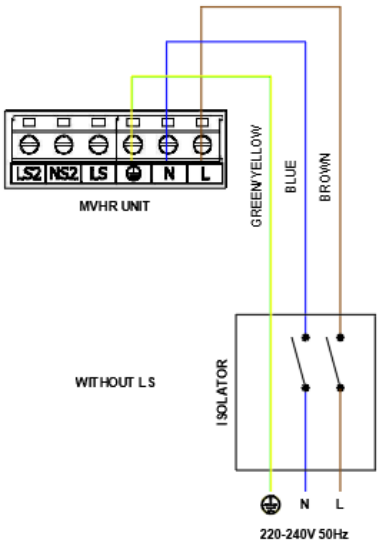

Accessing the Main PCBA

WARNING

ENSURE THE ELECTRICAL SUPPLY AND CONTROLS ARE ISOLATED FROM THE MAINS POWER SUPPLY BEFORE REMOVING ACCESS COVERS

NOTE: ALL PRINTED CIRCUIT BOARDS ARE ESD SENSITIVE. ALWAYS ENSURE THE CORRECT ESD PROTECTION IS USED.

Step 1: Remove the front cover by pressing the tabs either side of the control module and lifting the cover outwards from the bottom edge.

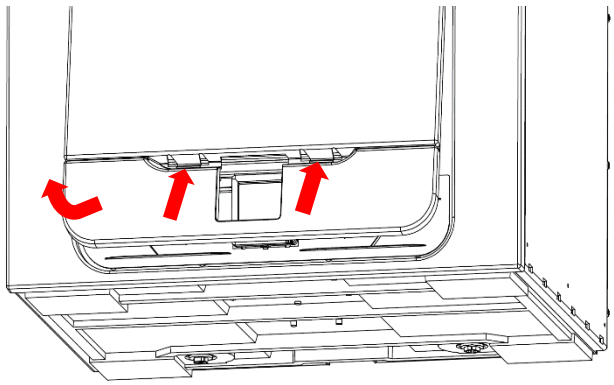

Step 2: Remove the two screws on either side of the access panel. Lift the panel outwards from the bottom edge to remove.

Note: The access panel is tethered to avoid cable strain.

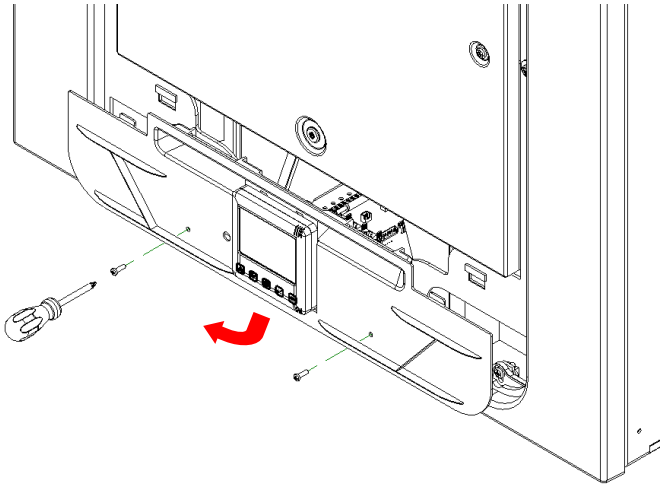

Step 3: Push the locking tab away from the printed circuit board and slide it outwards to access the terminals.

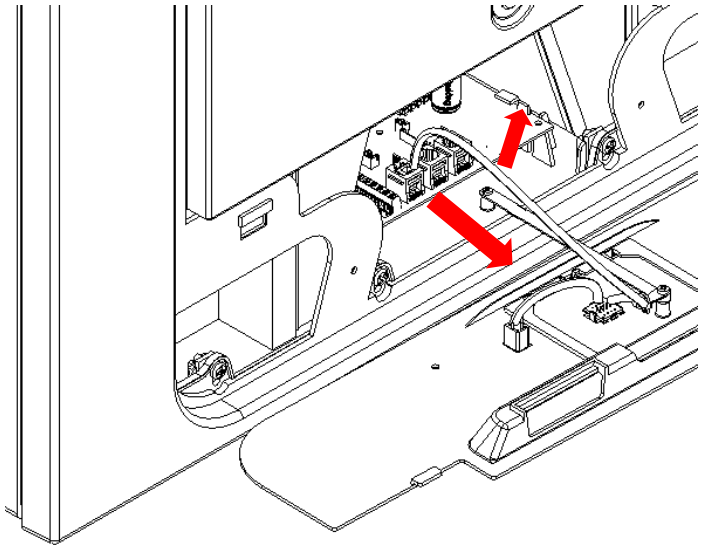

Connecting a Boost (Light) Switch from a different circuit, Controllers and Sensors

For good EMC engineering practice, any sensor, switched live or Volt free cables should not be installed within 50mm of other cables or in the same metal cable tray as other cables.

When fitting external controls, all cables should be routed through the back box on the rear of the unit, as shown below.

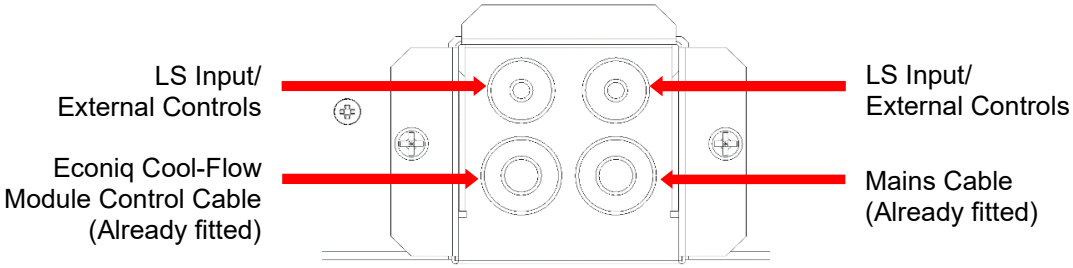

Back box cable entry

Connect any switches or sensors required to the unit via the terminal connections along the side of the main PCB, as shown below.
If necessary, contact your distributor regarding the wiring and fixing of accessories and sensors.

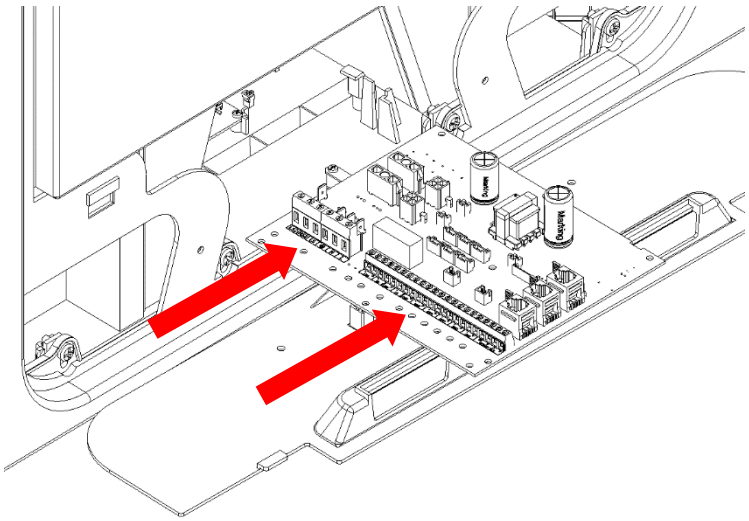

Terminal Connections

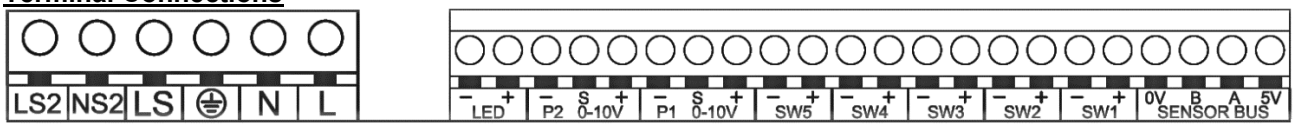

Terminal No.	Name	Description
LS2	Switched Live 2	220-240 V AC, 50 Hz input
NS2	Switched Neutral 2	220-240 V AC, 50 Hz input
LS	Switch Live	Switch Live (Common neutral with Mains Supply)
⏚ EARTH	Mains Earth	Earth connector
N	Mains Neutral	220-240 V AC, 50 Hz input
L	Mains Live	220-240 V AC, 50 Hz input
LED	Red Light Emitting Diode Output	A LED driving signal output between the - and + terminals that enables remote indication of a unit fault. See the Control Panel for fault code (see on page 50). May also be used for a connection to a BMS or similar.
P2 -s+ P1 -s+	0-10V	0-10V sensor input with 24V supply terminal
SW 1-5	Switch 1 to 5	Volt-free contact for sensor input between - and + terminals
0V, B, A, 5V	Sensor Bus	RS485 Termination for remote wired sensors/Controller

Connecting a Boost (Light) Switch from a different circuit

If the supply used for the Switched Live is on a different circuit to the power connections, the connections LS2 and NS2 should be used, via a separate isolator.

Please follow circuit diagram as shown.

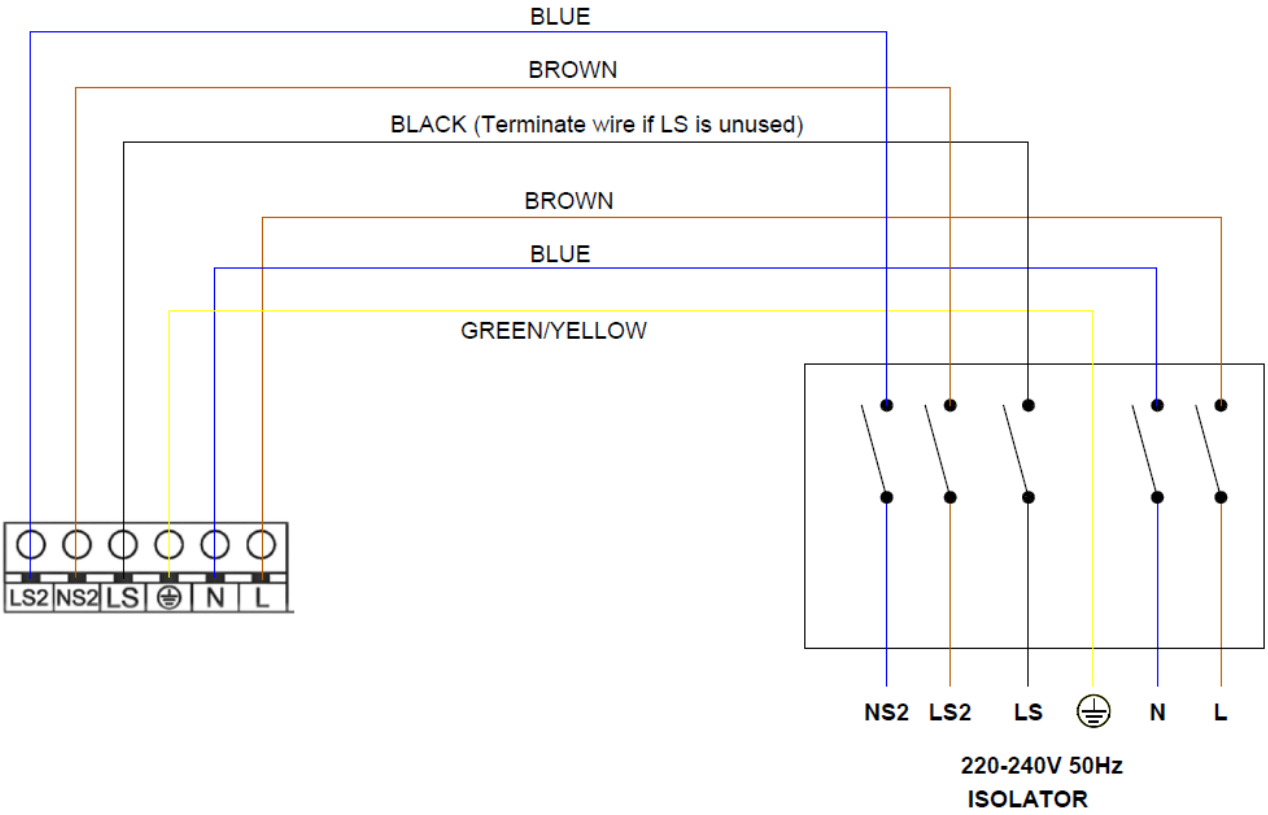

Connections Diagram for Econiq Cool-Flow Module to Mains Supply

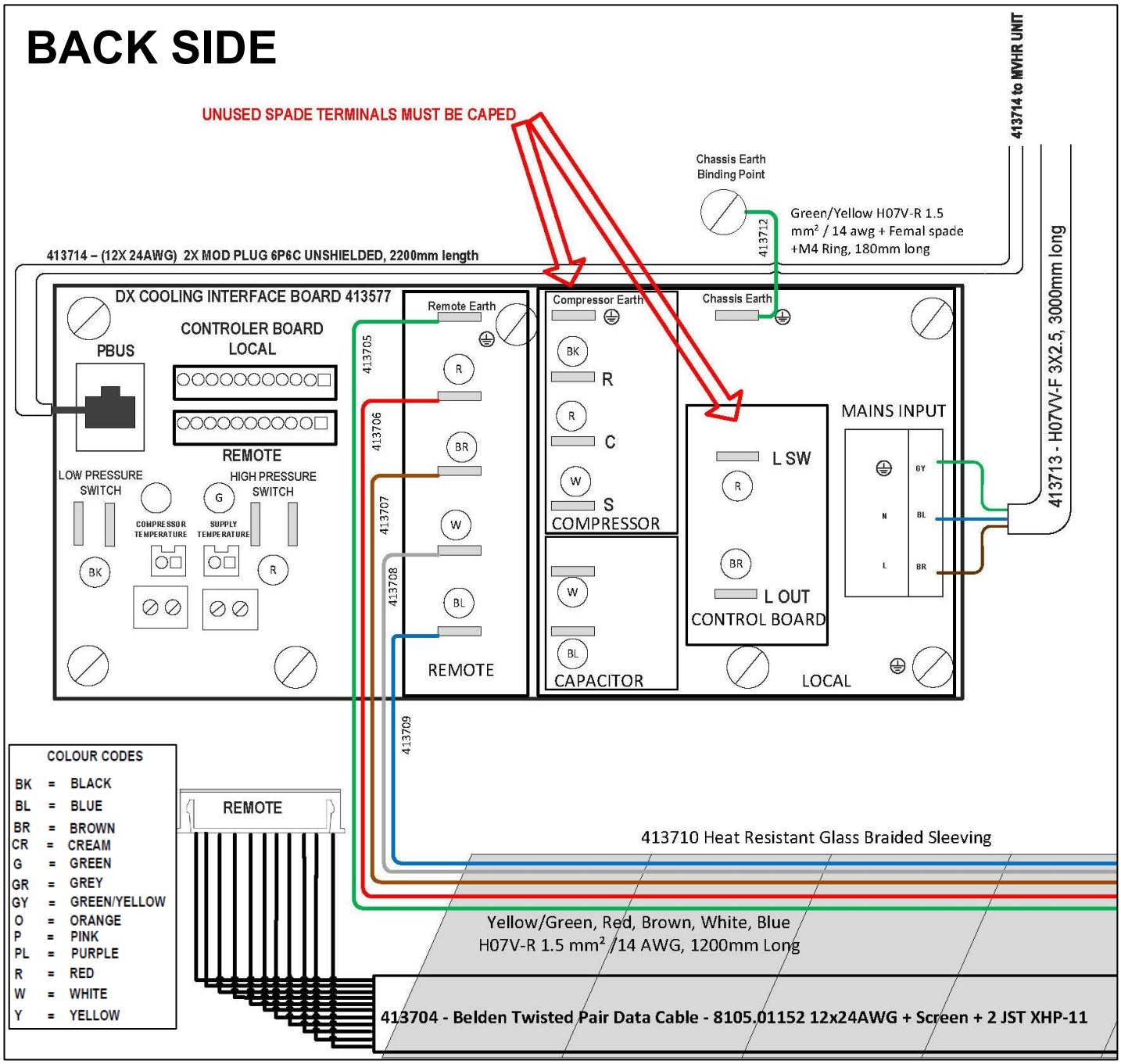

Continued on next page

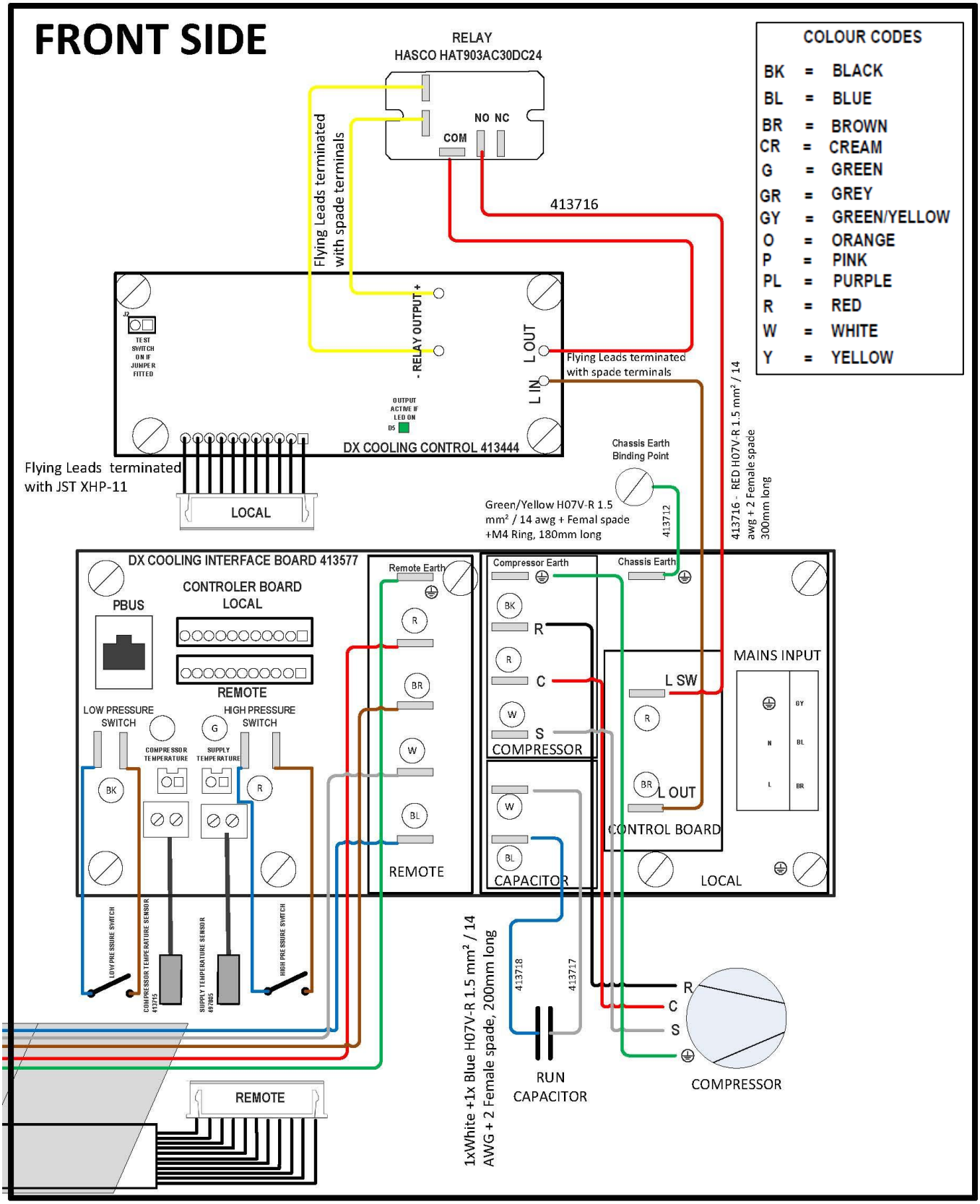
FRONT SIDE
RELAY
HASCO HAT903AC30DC24
NO NC
COM
Flying Leads terminated with spade terminals
413716
COLOUR CODES
BK = BLACK
BL = BLUE
BR = BROWN
CR = CREAM
G = GREEN
GR = GREY
GY = GREEN/YELLOW
O = ORANGE
P = PINK
PL = PURPLE
R = RED
W = WHITE
Y = YELLOW
- RELAY OUTPUT +
L OUT
L IN
Flying Leads terminated with spade terminals
TEST SWITCH ON IF JUMPER FITTED
OUTPUT ACTIVE IF LED ON
DX COOLING CONTROL 413444
Flying Leads terminated with JST XHP-11
LOCAL
Chassis Earth Binding Point
Green/Yellow H07V-R 1.5 mm² / 14 awg + Femal spade +M4 Ring, 180mm long
413712
413716 - RED H07V-R 1.5 mm² / 14 awg + 2 Female spade 300mm long
DX COOLING INTERFACE BOARD 413577
PBUS
CONTROLER BOARD LOCAL
REMOTE
LOW PRESSURE SWITCH
HIGH PRESSURE SWITCH
COMPRESSOR TEMPERATURE
SUPPLY TEMPERATURE
Remote Earth
REMOTE
Compressor Earth
Chassis Earth
R
C
S
COMPRESSOR
CAPACITOR
L SW
L OUT
CONTROL BOARD
MAINS INPUT
LOCAL
LOW PRESSURE SWITCH
COMPRESSOR TEMPERATURE SENSOR 413715
SUPPLY TEMPERATURE SENSOR 497065
HIGH PRESSURE SWITCH
REMOTE
1xWhite +1x Blue H07V-R 1.5 mm² / 14 AWG + 2 Female spade, 200mm long
413718
413717
RUN CAPACITOR
COMPRESSOR

Mains Connection

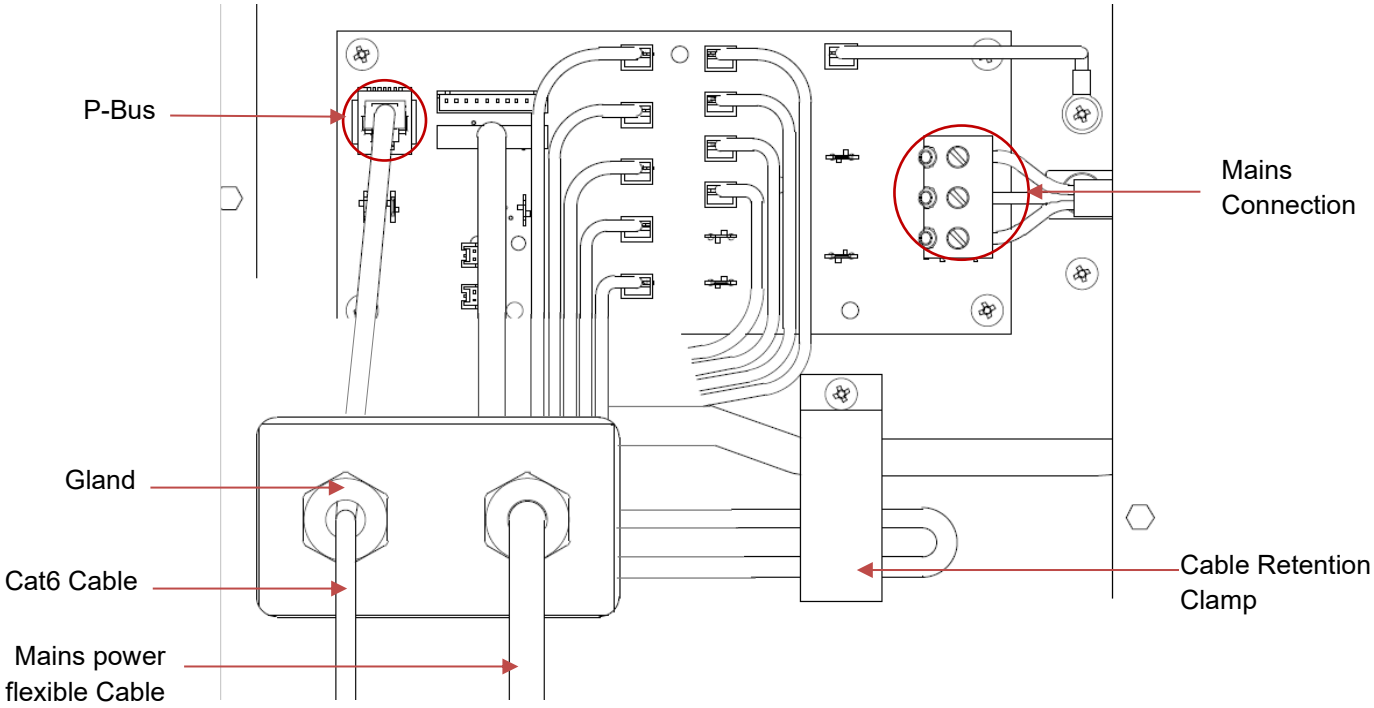

P-Bus Connection

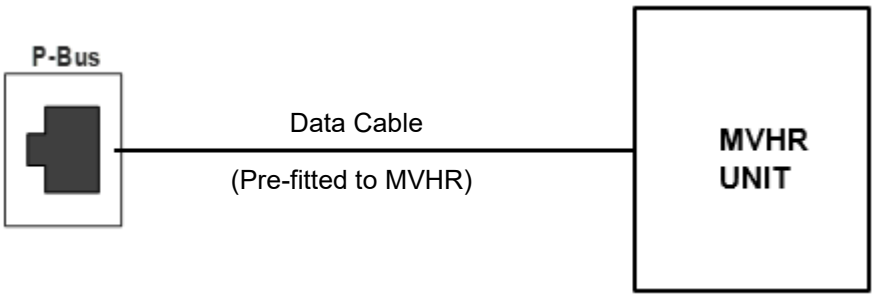

Powering up the Unit

Switching On

To switch the unit on:
1. Switch on the power at the mains supply isolator feeding the unit.
2. Following switch-on, after initialisation (up to 2 minutes) the fan motors will start and the Control Unit will display the home screen.

N.B. If you are intending to carry out work or maintenance inside the unit, isolate the supply to the unit before removing any covers.

Switching Off

To switch the unit off:
1. Turn the power off at the mains supply isolator.

Initialisation/Loading Screen

Firmware version
1 – HMI
2 – Bluetooth & WiFi
3 – PCB Main Board

The Initialisation can take 2 minutes to complete.

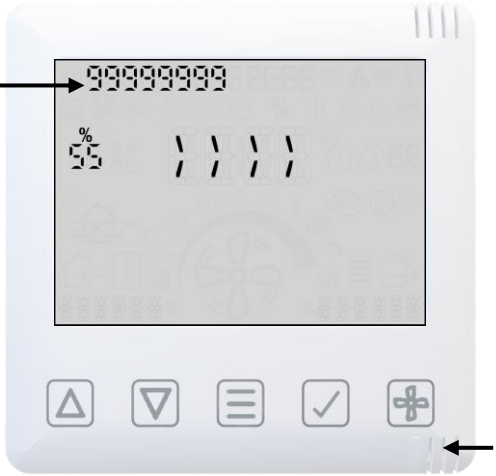

Primary Devices
Idle White LED indicates primary HMI, this device supports Bluetooth/Wifi connection (see Smart Device Pairing)

Additional Devices (If purchased)
Idle Green LED indicates secondary HMI device, no Bluetooth/WiFi support. (Refer to Pairing Sensors)

Serial number on initialisation

Serial number displayed after initialisation is complete.

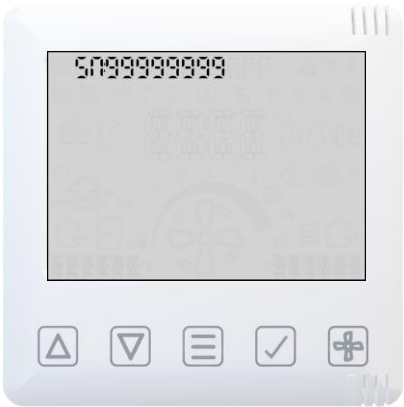

Overview

The instructions in this section are intended to provide configuration and operation information for setting up the equipment. In the event of problems, see Diagnosing a Problem on page 50.

Follow good practice when commissioning the unit. Ensure that the system is installed according to the system designer's intent incorporating any acoustic ducting, that all joints are airtight, ducting is well supported, bends are avoided close to vents, and that the vent valves are fully open at the start of the commissioning process.

Commissioning of the unit should be done via the App. See page 27 for Smart Device Pairing.

Note: We would recommend the latest firmware is installed via the firmware manager in the app (under menu "advanced settings"), on first connection.

Display overview – Home screen

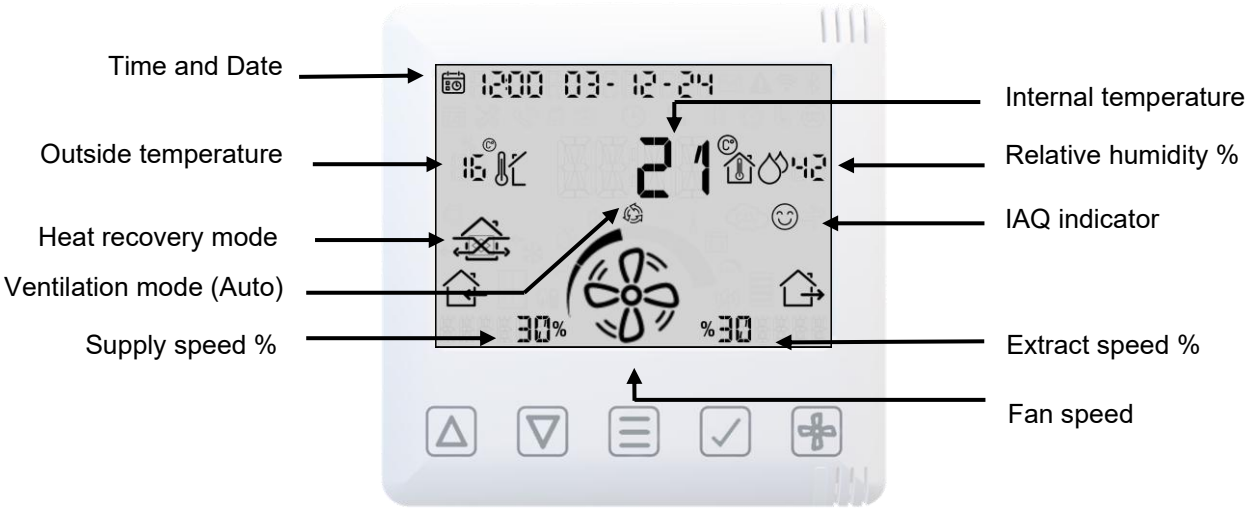

Home User Menu

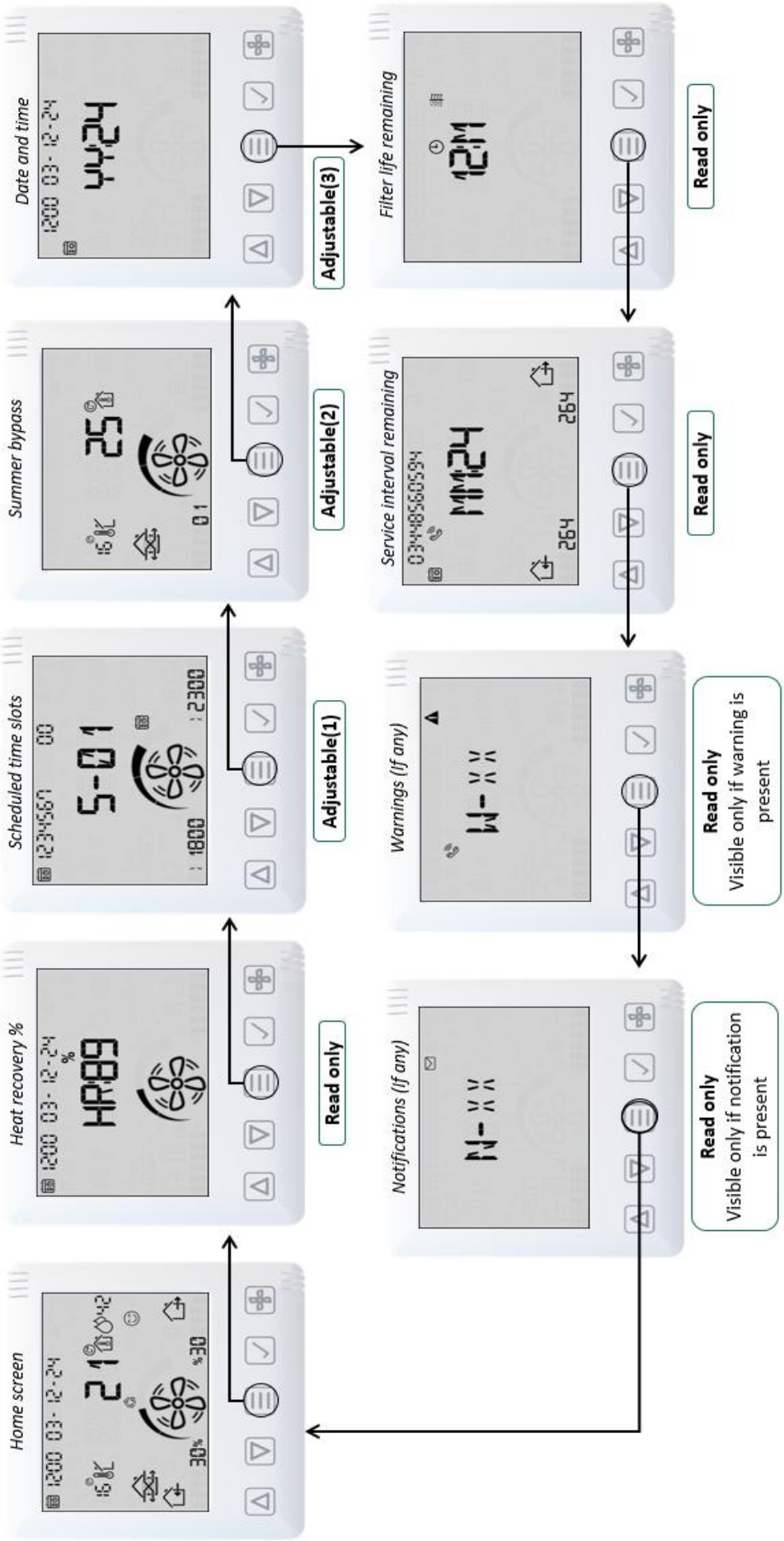

Display overview – Additional icons

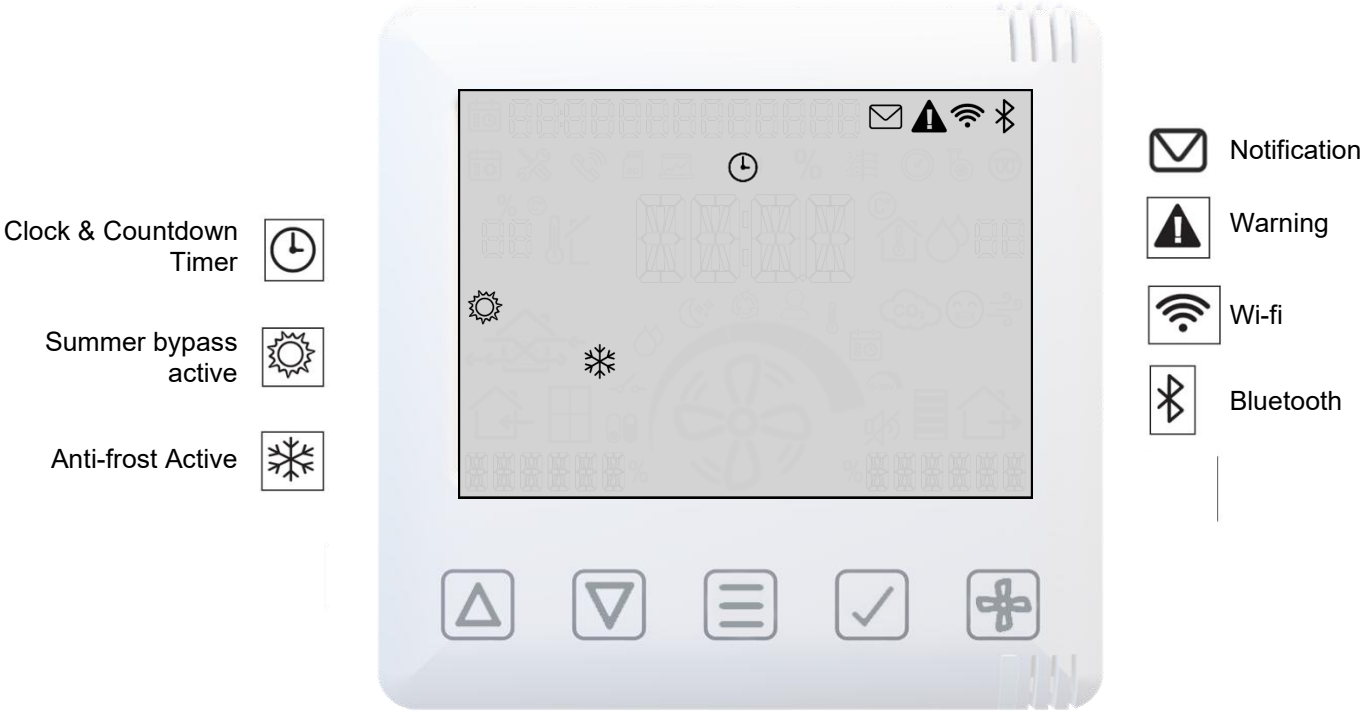

Display overview – Mode indicators

Display overview – Indoor air quality monitor

Air quality indicator uses sensor values that the unit supports:

- Relative humidity
- CO2 (if fitted)
- TVOC (if fitted)

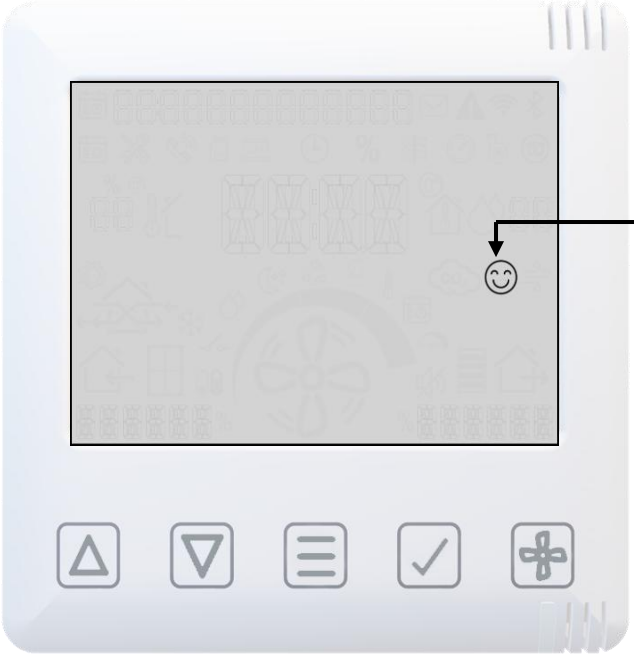

IAQ indicator

No additional demand

Proportional demand

Full boost operation

Display overview – Heat Recovery mode

Heat Recovery Mode

Bypass

Balance

Imbalanced

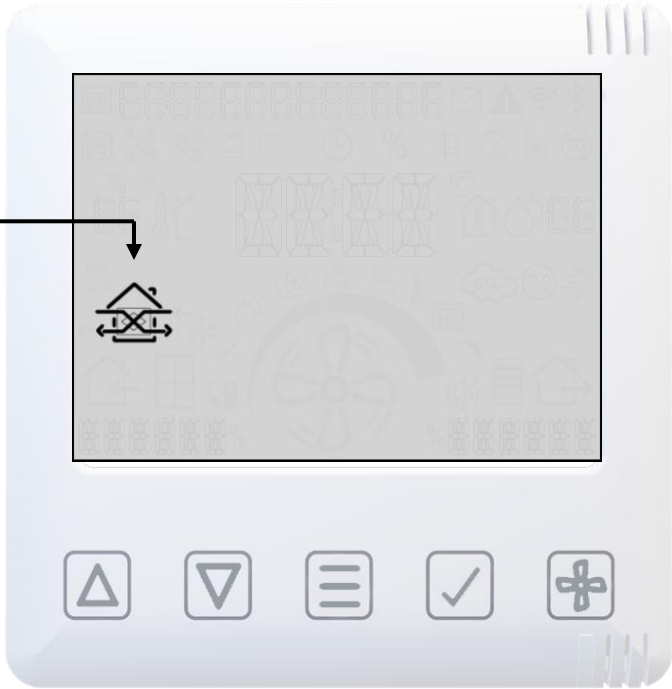

Smartphone Device Pairing and App download

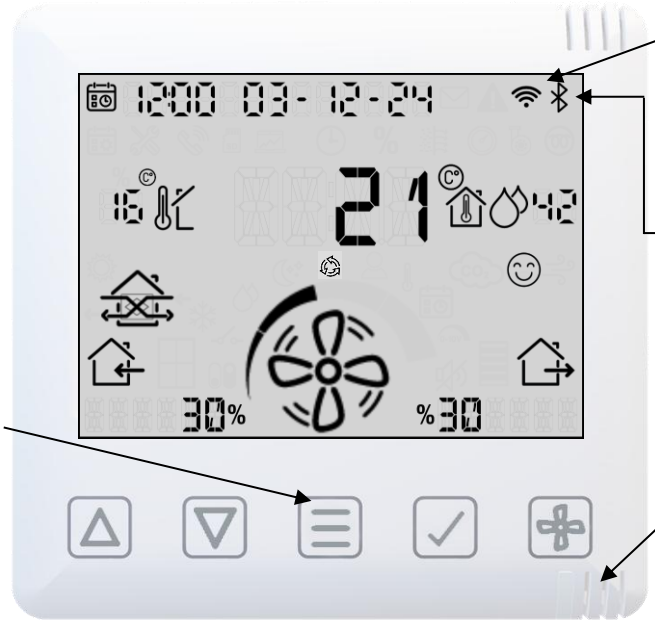

The App allows the user instant access to commissioning, configuration, direct monitoring and control of the MVHR unit, using a smart phone or tablet with the **Vent-Axia Connect App**, available from the iTunes Store or on Google Play.

Note: Bluetooth must be enabled on the device before commencing the pairing process.

Download on the App Store

GET IT ON Google Play

Pairing sensors

To pair the unit with a wired or wireless sensor:

- Press and hold the **MENU** button until the LED illuminates solid White.
- Release the **MENU** button, the LED will flash White to indicate that it is in pairing mode. The unit will remain in pairing mode for 5 minutes, or until the **MENU** button is pressed again.
- Activate the pairing function on the sensor to be paired (see the instructions that came with the sensor).
- When a sensor is paired the total number of paired devices is displayed on the unit.

Note: Wired controls and sensors must be connected in a RS485 bus configuration. At the start and end of the bus system, the jumper (termination resistor) on the control board and sensor must be in the correct position. Refer to Sensor Manual.

Removing sensors

To remove paired sensors, the unit must be reset. Caution, this will reset all values back to factory default.

- Press the **MENU** button to turn on the display.
- Press and hold the **MENU** button until the LED illuminates solid Red.
- Release the **MENU** button, the LED will stay Red.
- Pressing the **MENU** button again will confirm the reset command. If a reset is not wanted, leave the unit until the command times out and the LED turns off.

Speed override

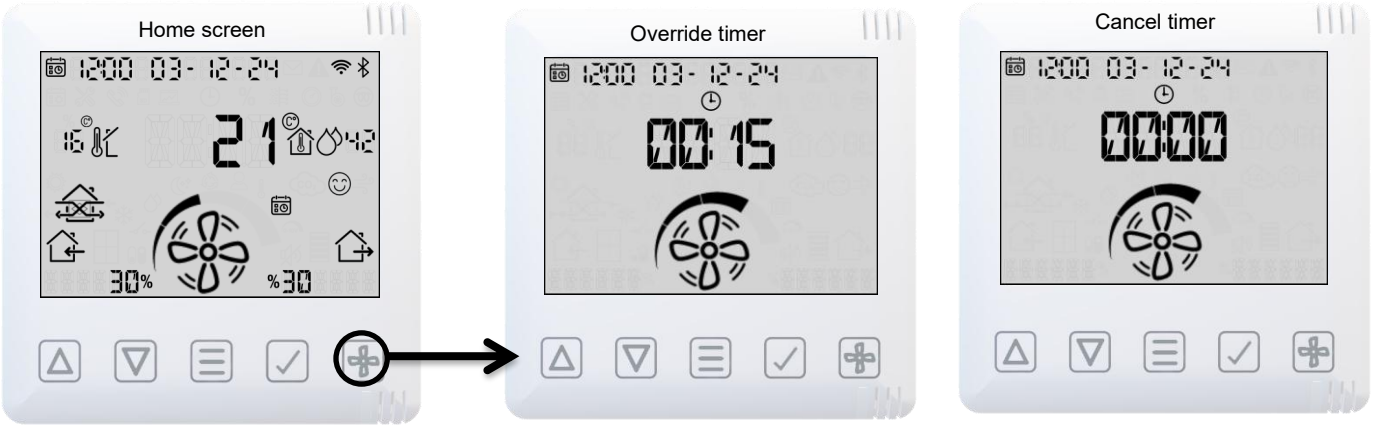

To Cancel the Override timer, set the time to 00:00

- Increase Timer
- Decrease Timer
- Change Fan Speed – Low, Normal, Boost, Purge
- Confirm Timer

Heat recovery

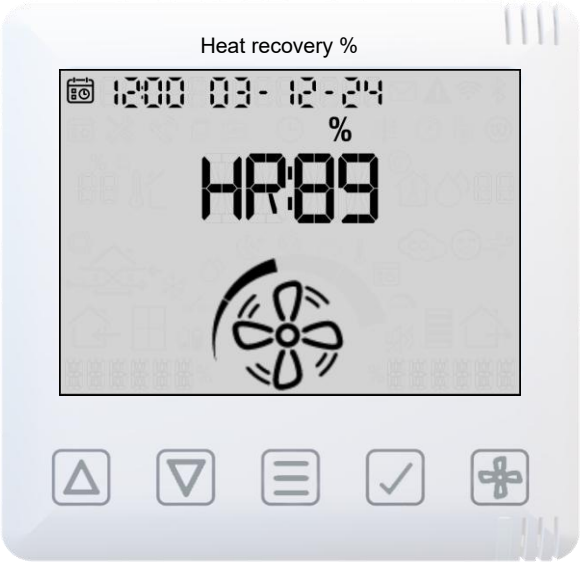

Heat Recovered information

(in Percentage Approximate)

Schedule

Day 1 =

1,2,3,4,5 are week days

6,7 are weekend days

1,2,3,4,5,6,7 are week days and weekends

Start Time

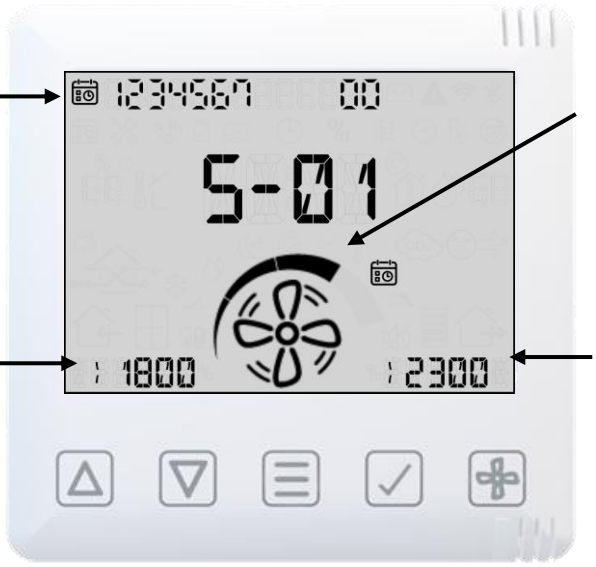

Fan Speed

1 Bar = Low

2 Bar = Normal

3 Bar = Boost

4 Bar = Purge

Finish Time

Press 2 x from Home Screen to enter scheduling.

Enter edit mode/Confirm Selection.

Move between existing schedules and adjust schedule times/days in edit mode.

Change Fan Speed – Low, Normal, Boost, Purge when flashing.

Silent hours Mode

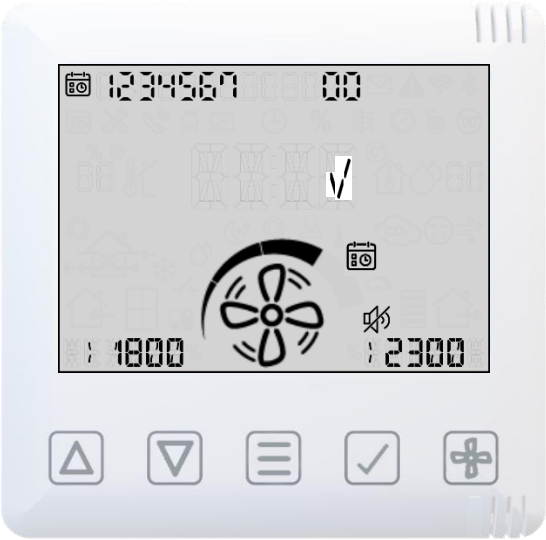

Silent Mode Enabled

(Don't allow Boost and Purge Speed Preset)

Silent Mode Disabled

(Allow all Speed Presets)

Silent hours Enabled

Summer Bypass

Mode 1 and Mode 4 fan speeds are not adjustable.

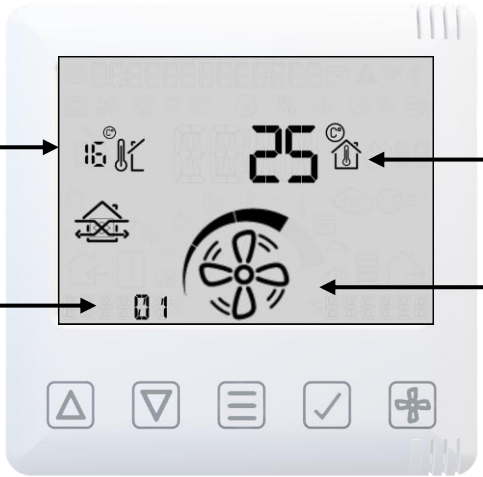

Press 3 x for Summer Bypass Screen

Press 1 x for Bypass Mode

00 = Disabled (not recommended)
01 = Normal Bypass
02 = Evening Fresh
03 = Night Time Fresh
04 = Modulated Normal Bypass
05 = Modulated Evening Fresh
06 = Modulated Night Time Fresh
See page 59 for details.

Press 2 x for Indoor Temperature

Press 3 x for Outdoor Temperature

Press TICK to Save

Change field up/down

Change Fan Speed - Low, Normal, Boost, Purge

Summer Bypass when Cooling Enabled

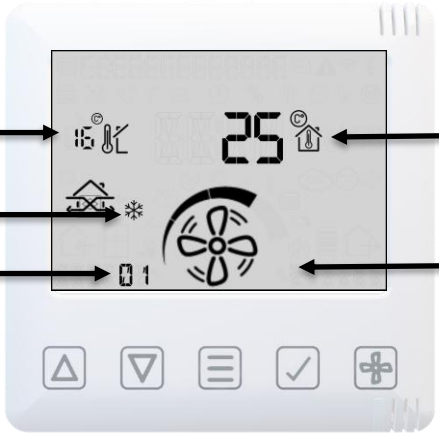

Note: The selected airflow being sufficient for the cooling unit. For more details refer Page 5 (Technical Specifications) & Page 55 (Flow Rate Settings).

Date / Time

Press 4 x from Home Screen to enter Date/Time screen.

Enter/Confirm Selection

Change entry within below field.

YY = Year
MM = Month
DD = Day
HH = Hour
MM = Minutes

Filter reset

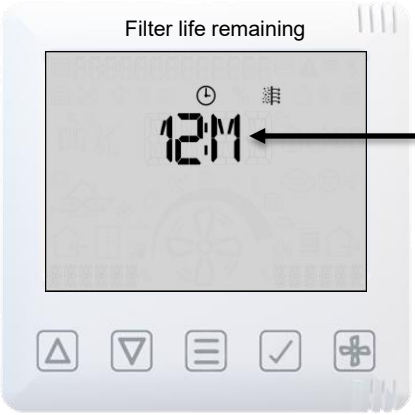

Press 5 x from Home Screen to enter filter screen.

Change service duration for filters: 3, 6, 12 or 18 months.

Press TICK to Save.

Months remaining, will indicate when filters need replacing/cleaning.

Press 5 x from Home Screen to enter Filter screen.

Press UP button to 'RSET' service duration for filters.

Press TICK to Save.

00:M displays i.e. resetting the filters to current time from last replaced time.

After 1 minute, filter life remaining months gets displayed in the filter interval screen

Note: Reset option will allows the unit to reset the last filter replaced time to current time. Once the reset is done, it then displays the actual period left for next Filter replacement.

Warning Screen

Please see Page 50
for warning codes

Important: This screen is only visible if a warning is active.

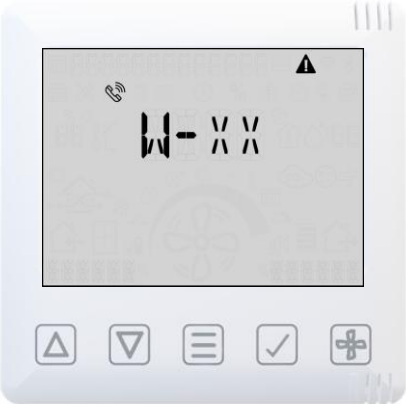

Service Interval Remaining

Month remaining
before service is due.

Press 6 x from Home Screen to enter Service Interval Screen.

Note: The Service phone number will be set via app.

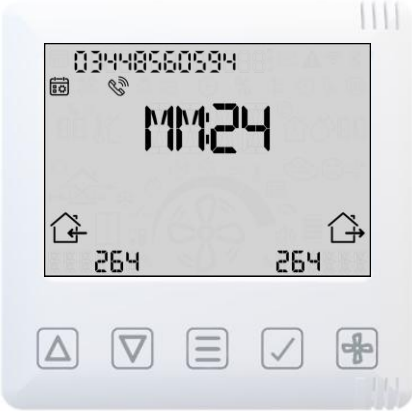

Notifications if any

Please see Page 50
for notification codes

Advanced menu

Engineering mode

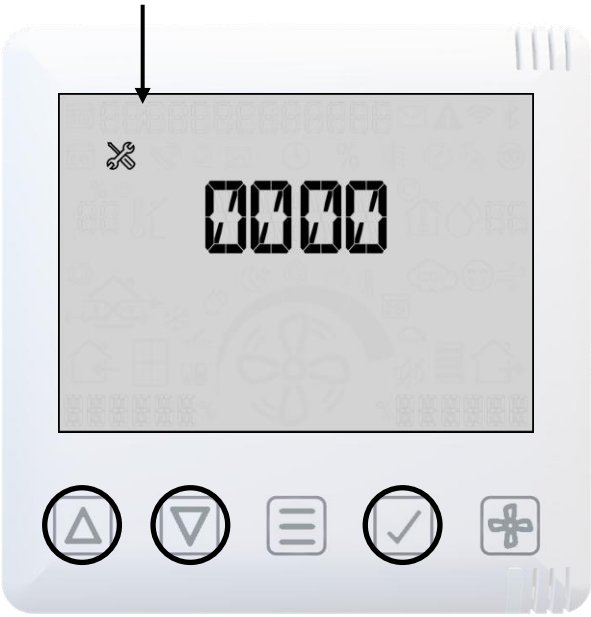

Important: Be on the Home Screen, before pressing and holding the UP button to enter into Engineer menu.

Press and hold for 3 seconds to exit or enter the Engineer Menu.

Use up and down to adjust each pin number and press to confirm each number and enter Engineer settings.

Advance Menu Overview

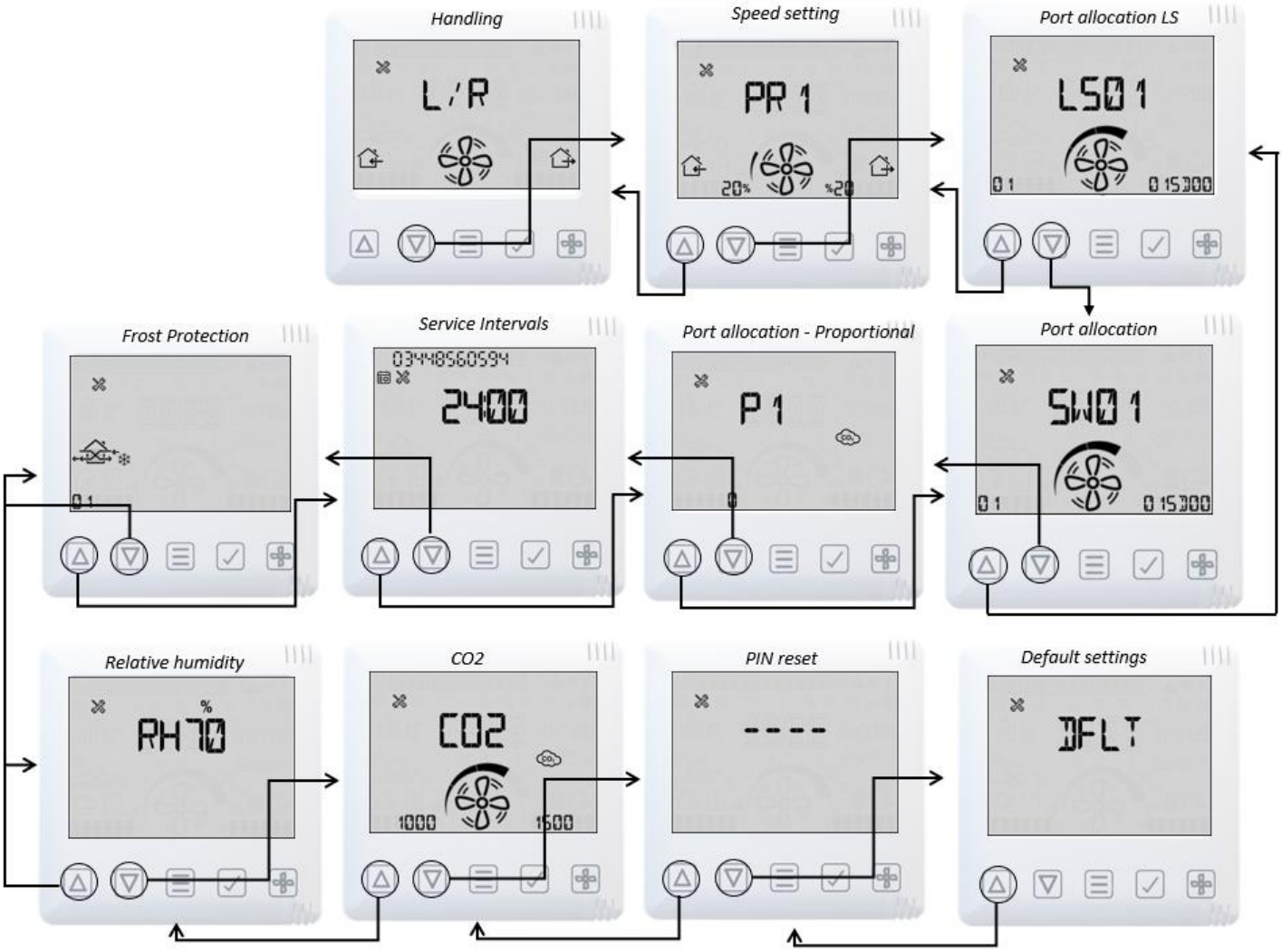

Important: "Airflow units" is only visible on Constant Volume models. "CO2" is only visible when using a CO2 sensor.

Advanced menu– Unit handing

Please see page 4 for details of handing.

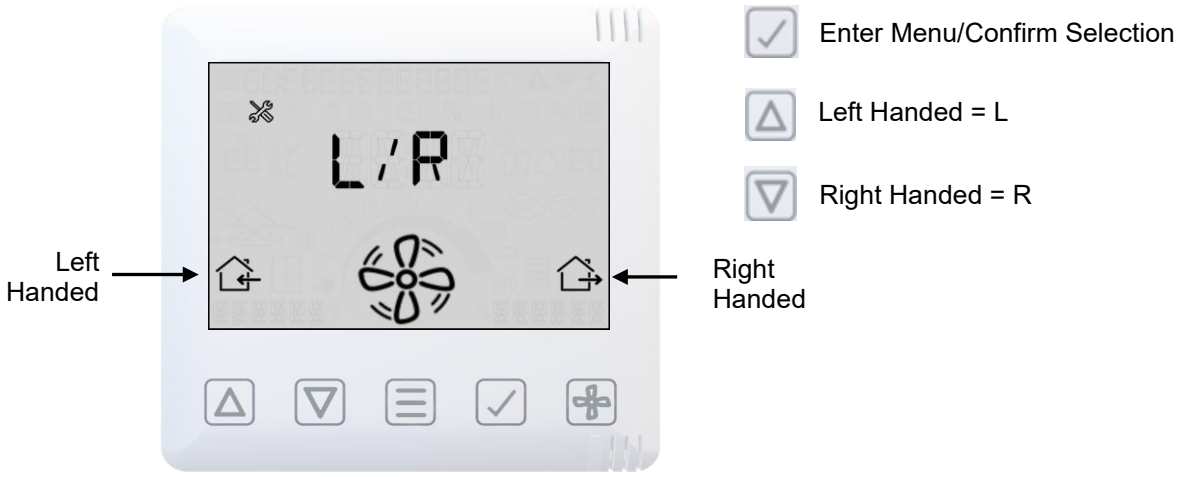

Note: MVHR with Left-Hand and Right-Hand spigot configuration. Units with a preheater are preconfigured from the factory and the handing cannot be changed.

Advanced menu– Airflow speed setting

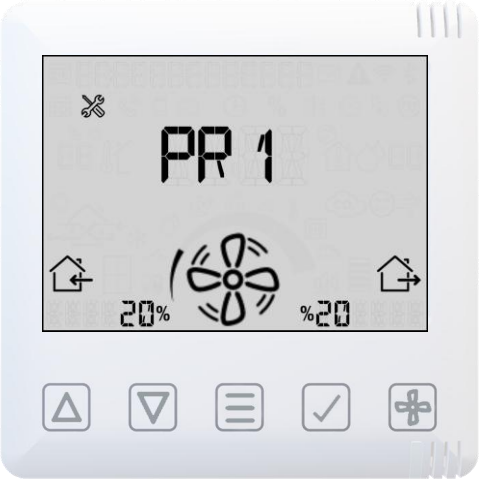

Select PR1-4

Enter/Confirm Selection

Adjust flow rate as %

PR1 = Low Speed 20% Default

PR2 = Normal Speed 30% Default

PR3 = Boost Speed 50% Default

PR4 = Purge Speed 100% Default

Refer default settings (page 60) for more details.

MVHR unit will run at speed indicated on this screen to aid commissioning.

Advanced menu– Port allocation LS

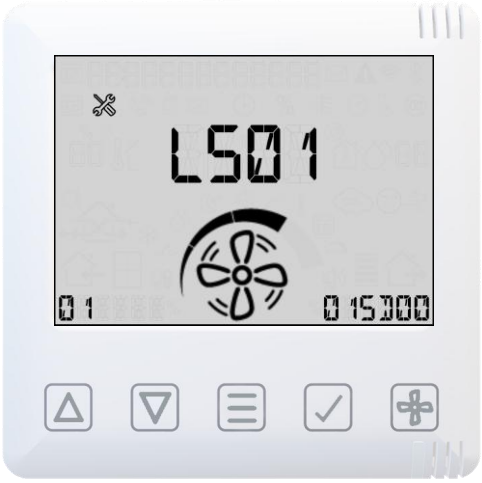

Change Fan Speed – Low, Normal, Boost, Purge

Enter/Confirm Selection

Change Port for Live Switch LS01 or LS02

Port modes are:
00 - Disabled
01 - Continuous
02 - PIR
03 - Momentary Switch
04 - Central Heating Active /Cooling Disabled
05 - Fire Alarm
06 - System Enable (not recommended)
(07 not applicable to MVHR)
08 - Cooling Override

Overrun and Delay can set from 0 to 99 minutes.
Refer default settings (page 60) for more details.

Advanced menu– Port allocation

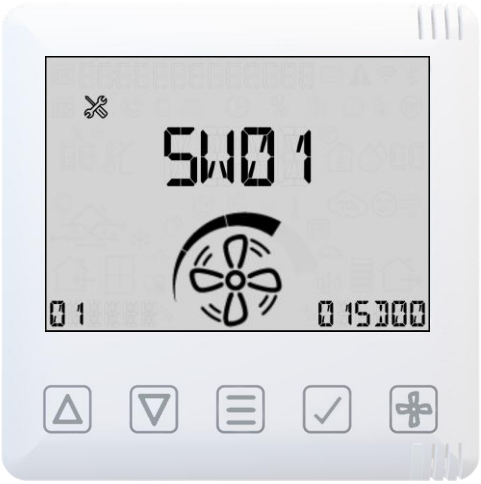

Change Fan Speed – Low, Normal, Boost, Purge

Enter/Confirm Selection

Change Port Switch SW01 to SW05

Port modes are:
00 - Disabled
01 - Continuous
02 - PIR
03 - Momentary Switch
04 - Central Heating Active /Cooling Disabled
05 - Fire Alarm
06 - System Enable (not recommended)
(07 not applicable to MVHR)
08 - Cooling Override

Overrun and Delay can set from 0 to 99 minutes.
Refer default settings (page 60) for more details.

Advanced menu– Proportional Inputs

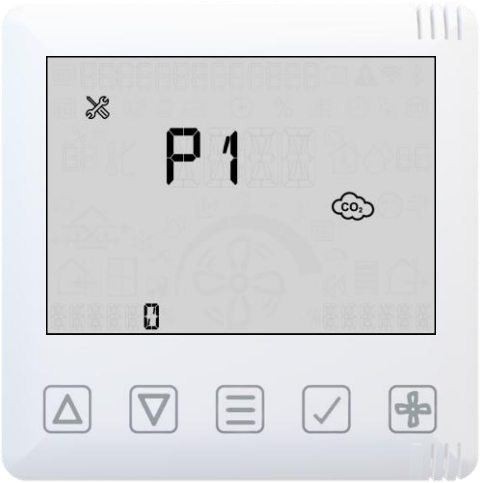

Press Once for Zonal Selection

Press twice for Control method Selection

Change Proportional Control P1 or P2

Change Zonal Control 0-15

Or

Control Method Temperature, Humidity, 0-10V, CO2

Refer default settings (page 60) for more details.

Note: More configuration options available in the App at advanced settings menu, see on page 17.

Advanced menu– Service Intervals

Service Icon

Enter/Confirm Selection

Reset Service Interval

Change service interval 1-60 months.

Refer default settings (page 60) for more details.

Advanced menu– Frost Protection mode

Frost Protection Mode

01 Imbalanced Airflow

02 Bypass

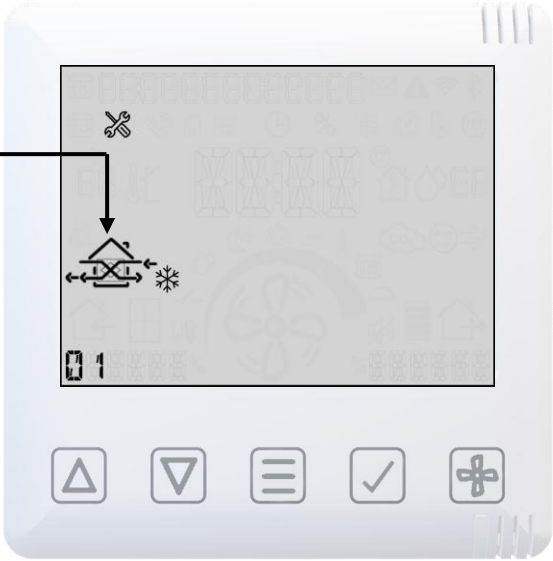

Enter/Confirm Selection

Alternative Modes

Refer default settings (page 60) for more details.

Advanced menu– Humidity

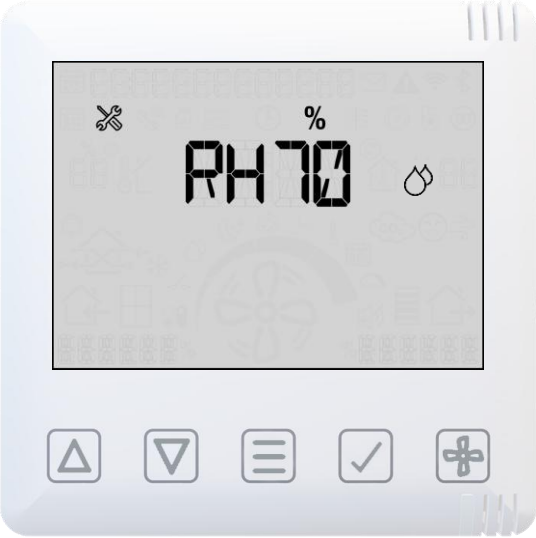

Enter/Confirm Selection

Change Relative Humidity between 50-90%

70% Default

Refer default settings (page 60) for more details.

Rapid rise can be Enabled/Disabled via the App. Along with Ambient response/overrun times.

Advanced menu– CO2 threshold

This is only visible when the CO2 sensor is installed.

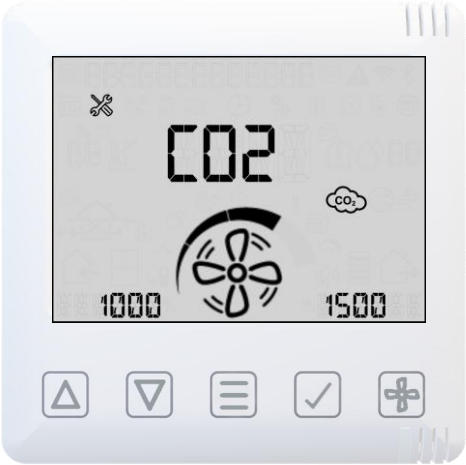

Enter/Confirm Selection

Change Fan Speed - low, normal, boost, purge

Change CO2 PPM Threshold 1000-2000 Default

Refer default settings (page 60) for more details.

Advanced menu– PIN Change

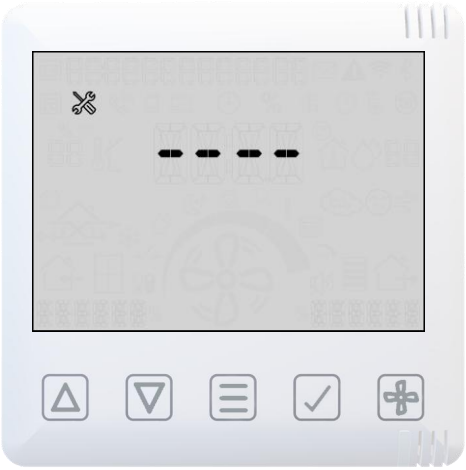

Enter/Confirm Selection

Change Pin Number 0-9

Refer default settings (page 60) for more details.

Advanced menu– Resets unit to factory defaults (including Handing & Commissioning values) , Retains pairing with HMI and Sensors

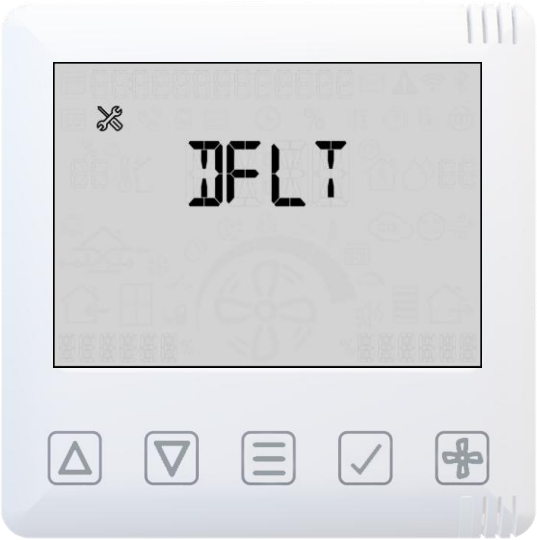

Scroll down to Default screen.

Press TICK button, a cross (✕) will then be displayed on screen.

Press the up arrow to change the on screen cross (✕) to a tick (✓).

Press the TICK button to confirm.

Motors will stop and mainboard will reset, HMI will remain powered.

HMI Hard Reset

Warning: This will hard reset the user interface to default and unpair all sensors.

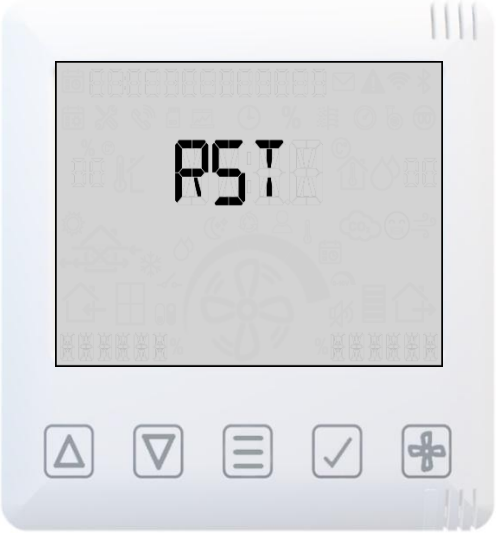

Press & hold the menu button for 13 seconds.

LED will illuminate Red light.

Press the menu button to reset Mainboard pairing table.

Press TICK button to Reset only HMI (including BLE PIN & WiFi PSK).

After resetting, if HMI not paired to mainboard, MVHR will be displayed.

Power cycle the unit to attempt auto-pairing.

HMI reset doesn't reset default values. It will restore the default values from commissioning (engineer) menu.

MVHR Screen – Primary/Additional(Secondary) HMI is not paired with mainboard

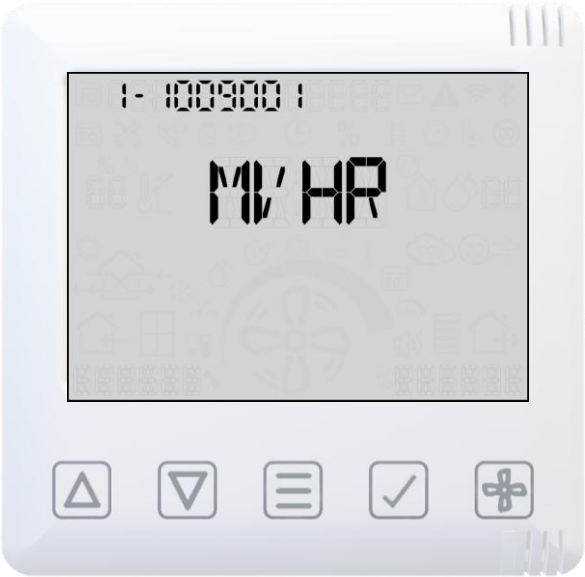

If the primary/additional(secondary) HMI is not paired with mainboard, then MVHR screen will display with cyan LED.

Primary HMI

If this is the primary HMI on the unit to perform auto-pairing, power off the mains supply and re-power after 10 seconds.

After power cycle, HMI initialization is done and home screen should display with solid white LED illuminated.

If not showing white idle LED, follow hard reset instructions (Page 36) to reset pairing table.

Secondary HMI

If this is a secondary HMI, enable pairing on the primary (press & hold Menu button from the home-screen for 3 seconds which should then show flashing white LED) and then repeat this on the remote HMI until paired (it shows green flashing while pairing and solid green when paired).

HMI – Display status when Cooling Active

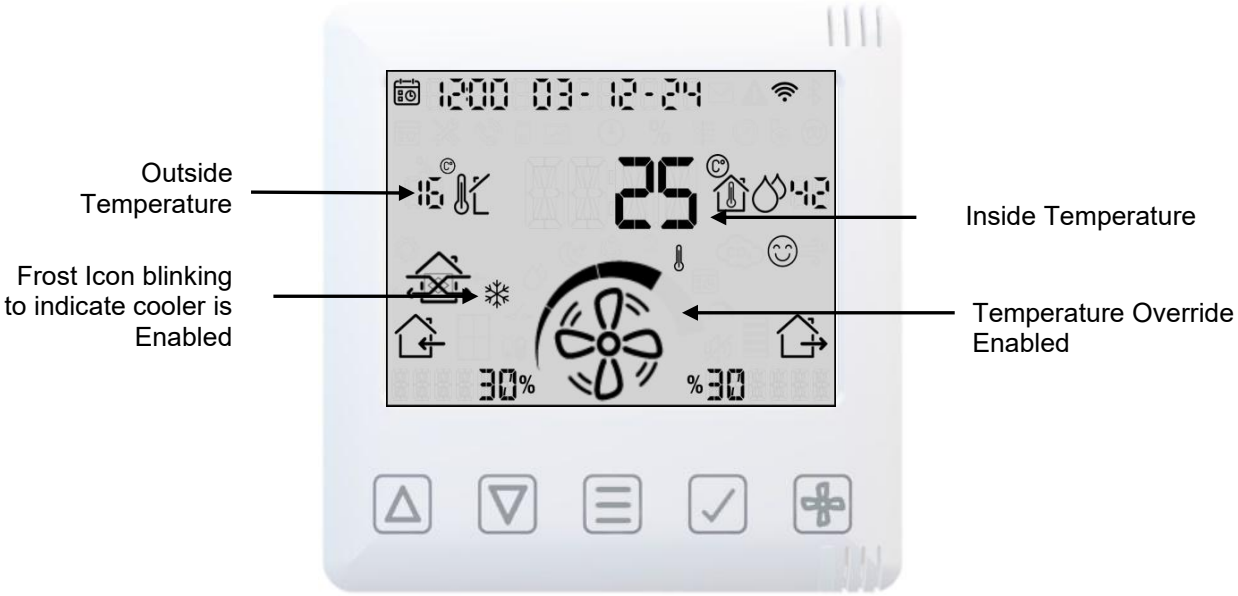

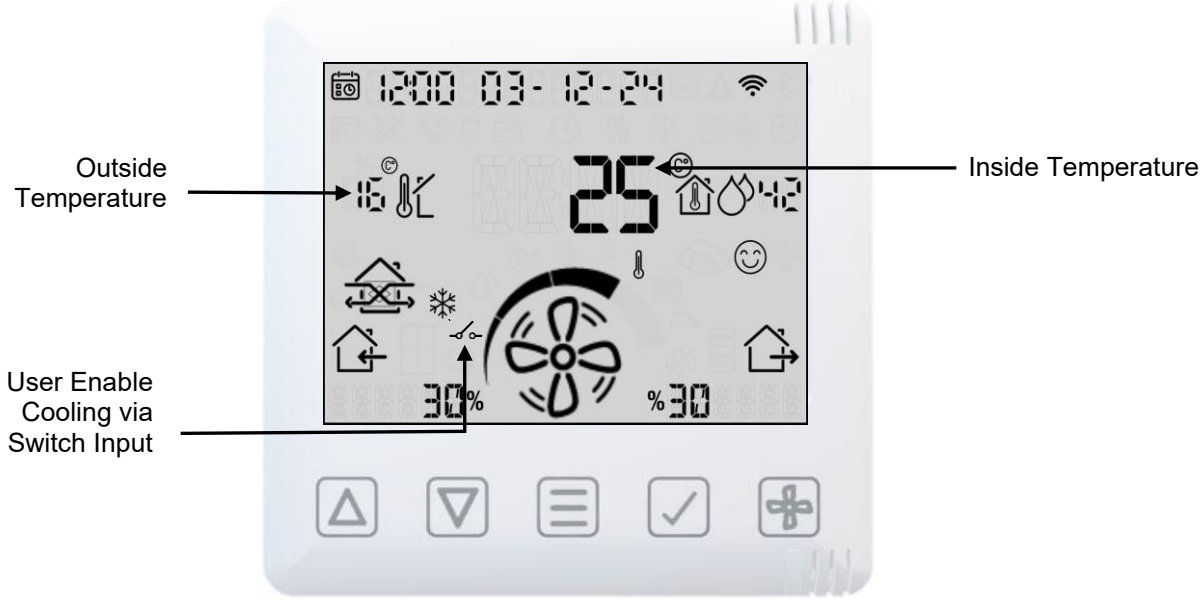

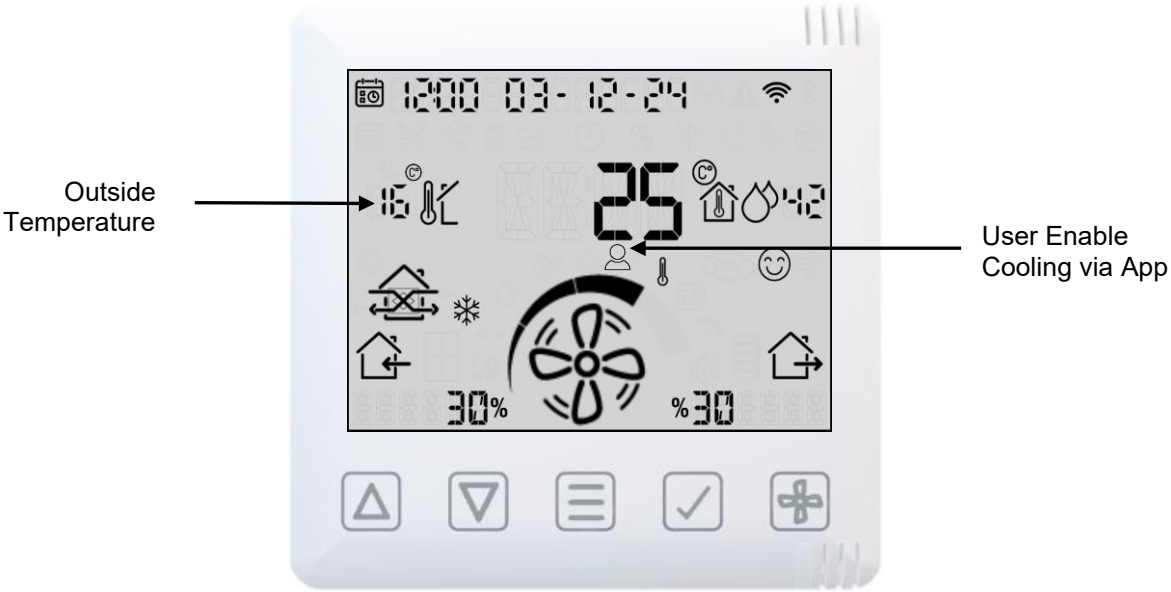

Active cooling on MVHR

The MVHR controller shall enable active cooling via the Econiq Cool-Flow Module by continuously measuring internal & external temperatures to maintain comfort thresholds efficiently.

Currently the automatic cooling is activated only if the inside air temperature is above the internal comfort threshold and the fans are set to run in demand speed, both of which are set in summer bypass config, to ensure there is sufficient airflows. The fan speeds can be still limited by silent hours override or user override when cooling active, but if the speeds are set too low the Econiq Cool-Flow Module will be disabled.

Note: The summer bypass threshold is set the same as the cooling threshold to allow free cooling. The Minimum speed for Sentinel Econiq Cool-Flow Module (Top Unit) to run is ≥60% which is equivalent to 288m³/hr (80l/s) at 150pa.

In addition to the automatic cooling, the following options shall be made available to enable/disable cooling:

1. **Cooling permanently switched off** – the user may choose to isolate the Econiq Cool-Flow Module from the mains. This can be managed through the SW port switches by selecting 04 - Central Heating Active/Cooling Disabled.

Enabling Cooling with a switch on SW or LS inputs on the Econiq (MVHR) Unit

Any SW or LS input can be configured to enable cooling on deand.
On the Engineering Menu Set the desired input to 8-Cooling.
The cooling will be active for 15 minutes by default this can be change by Overrun Timer.
In the example SW1 is set to cooling

Wiring diagram

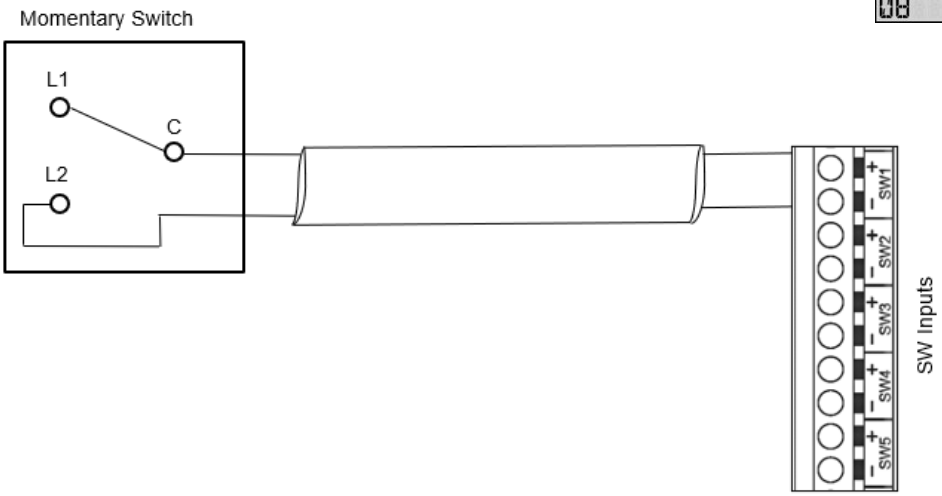

2. **Cooling disabled off by schedule** – the user may choose either a weekly or date-based schedule (e.g. “holiday mode”) to not allow Econiq Cool-Flow Module to be active for the duration.
3. **User enabled cooling** -
   - *Cooling Via Switch Input*: A switch input on the MVHR shall be allowed to be configured as a cooling override input, that demands the Econiq Cool-Flow Module to be enabled regardless of schedules/summer bypass being active. This should be a momentary override set to an appropriate short amount of time (default 15 minutes) after which the unit should be allowed to return to automatic control.
   - *Cooling Via App* - App settings shall allow the user to enable cooling down to a fixed temperature for a period of time during which the cooling will be enabled regardless of schedules or switch input state or summer bypass being active. Cooling will be enabled only as long as the inside temperature is above the new setpoint within the override period. The room temperatures are measured from the Extract Airflow unless a wired or wireless room Temperature sensor is fitted. See page 54 for available Accessories.

Filter Maintenance

Heat recovery units require regular maintenance. The Econiq range has been designed to allow easy access to filters with no tooling required.

When the unit displays a warning symbol and warning code: W-12 filter cleaning/replacement is overdue. When it displays notification N-1 the filter may need cleaning/replacement within the next month.

This is a reminder to ensure that the filters are not so dirty that they are blocking the airflow or allowing dirt to pass through. The rate at which the filters become dirty will vary hugely depending on the environment and the activity within the property. See page 49 for a list of spare filters.

1. Open the filter covers by pressing with 2 fingers, inwards and pulling the filter cover off.
2. Pull each filter out by the 2 filter tabs.

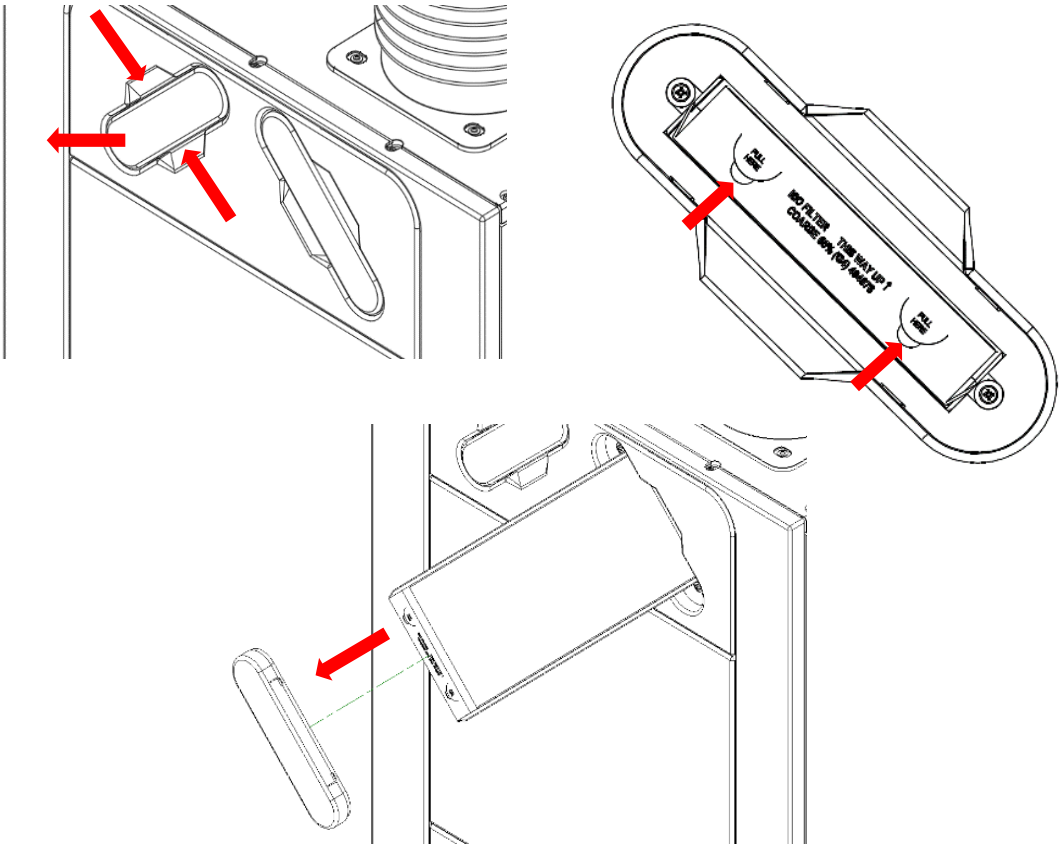

3. Clean gently by tapping or carefully using a vacuum cleaner if necessary.
4. Replace the filters into the unit.
5. Replace filter covers, ensuring they have clicked back into the locked position.
6. After maintenance of the filters, the filter timer can be reset via the controller (see page 32).

Periodic Maintenance

WARNING

THE FAN AND ANCILLARY CONTROL EQUIPMENT MUST BE ISOLATED FROM THE POWER SUPPLY DURING MAINTENANCE.

Heat Exchanger Cell

Step 1: Remove the outer cover by pressing the tabs either side of the control module and lifting the cover outwards from the bottom edge.

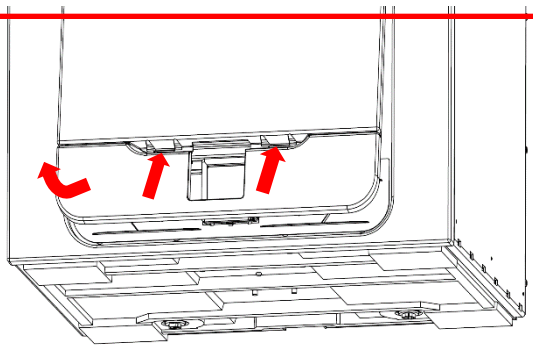

Step 2: Remove the inner door by undoing the 4 retaining screws.

Note: (When fitting inner door back to the unit, make sure the arrow is in the up position shown).

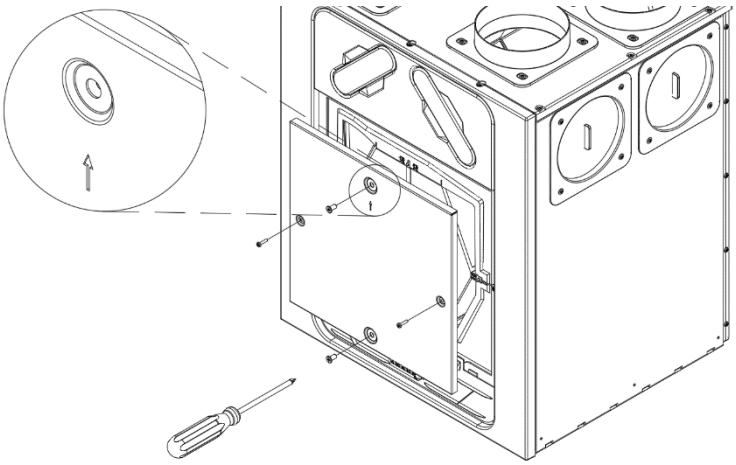

Step 3: Slide the heat exchanger out from the unit. (If cell is stiff to pull out of unit, pull cell strap from top, then from the bottom).

Warning: Sharp edges on cell ribs. Keep hands away from corners & wear gloves.

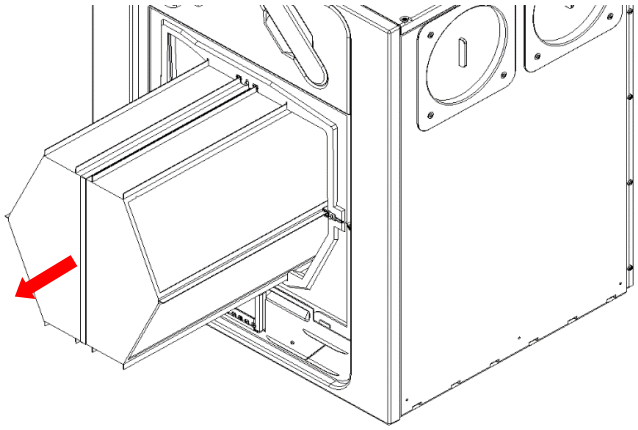

Step 4: Wash the outer cover and heat exchanger in warm water using a mild detergent (such as Milton Fluid) and dry thoroughly.

NOTE: Keep water away from all electrical components and wiring within the unit.

Motors

Inspect the motors for build-up of dust and dirt on the impeller blades, which could cause imbalance and increased noise levels. Vacuum or clean if necessary.

Condensate Drain

Check the condensate drain tube is secure and clear of debris. Clean if necessary. Ensure the trap is filled to the appropriate level of water if using a wet trap.

Fastenings

Check that all unit and wall-mount fastenings are sufficiently tight and have not become loose. Re-tighten if necessary.

Important Refrigerant Unit Installation, Servicing and Decommissioning information

WARNING

Do not use any methods to accelerate defrosting or cleaning, except those specified by the manufacturer.
The appliance shall be stored in a room without continuously operating ignition sources (for example: open flames, an operating gas appliance or an operating electric heater.
Do not pierce or burn.

- the maximum refrigerant charge amount is 0.7kg;
- the minimum rated airflow is 80l/s.

Be aware that refrigerants may not contain an odour.

- Keep ventilation openings clear of obstruction;
- Only serviceable parts (refer to page 49) shall be accessed within the Sentinel Econiq Cool Flow Unit. For failure of any non-serviceable parts please contact Vent Axia (see page 58).
- The unventilated area where the appliance using flammable refrigerants is installed shall be so constructed that should any refrigerant leak, it will not stagnate so as to create a fire or explosion hazard.
- The appliance shall be stored in a well-ventilated area where the room size corresponds to the room area as specified for operation;
- The appliance shall be stored in a room without continuously operating open flames (for example an operating gas appliance) and ignition sources (for example an operating electric heater).
- The appliance shall be stored so as to prevent mechanical damage from occurring.
- Any person who is involved with working on or breaking into a refrigerant circuit should hold a current valid certificate from an industry-accredited assessment authority, which authorises their competence to handle refrigerants safely in accordance with an industry recognised assessment specification.
- Only serviceable parts (refer to page 49) shall be accessed within the Sentinel Econiq Cool Flow Unit. For failure of any non-serviceable parts please contact Vent Axia (see page 58).
- Maintenance and repair requiring the assistance of other skilled personnel shall be carried out under the supervision of the person competent in the use of flammable refrigerants.
- Appliances that are intended to be permanently connected to fixed wiring, and have a leakage current that may exceed 10mA, shall have a residual current device (RCD) with a rated residual operating current not exceeding 30 mA is advisable.

Checks to the area

Prior to beginning work on systems containing flammable refrigerants, safety checks are necessary to ensure that the risk of ignition is minimised. For repair to the refrigerating system, the following precautions shall be complied with prior to conducting work on the system.

Work procedure

Work shall be undertaken under a controlled procedure so as to minimise the risk of a flammable gas or vapour being present while the work is being performed.

General work area

All maintenance staff and others working in the local area shall be instructed on the nature of work being carried out. Work in confined spaces shall be avoided. The area around the workspace shall be sectioned off. Ensure that the conditions within the area have been made safe by control of flammable material.

Checking for presence of refrigerant

The area shall be checked with an appropriate refrigerant detector prior to and during work, to ensure the technician is aware of potentially flammable atmospheres.
Ensure that the leak detection equipment being used is suitable for use with flammable refrigerants, i.e. non-sparking, adequately sealed or intrinsically safe.

Important Refrigerant Unit Installation, Servicing and Decommissioning information

Presence of fire extinguisher

If any hot work is to be conducted on the refrigeration equipment or any associated parts, appropriate fire extinguishing equipment shall be available to hand. Have a dry powder or CO2 fire extinguisher adjacent to the charging area.

No ignition sources

No person carrying out work in relation to a refrigeration system which involves exposing any pipe work that contains or has contained flammable refrigerant shall use any sources of ignition in such a manner that it may lead to the risk of fire or explosion. All possible ignition sources, including cigarette smoking, should be kept sufficiently far away from the site of installation, repairing, removing and disposal, during which flammable refrigerant can possibly be released to the surrounding space. Prior to work taking place, the area around the equipment is to be surveyed to make sure that there are no flammable hazards or ignition risks. “No Smoking” signs shall be displayed.

Ventilated area

Ensure that the area is in the open or that it is adequately ventilated before breaking into the system or conducting any hot work. A degree of ventilation shall continue during the period that the work is carried out. The ventilation should safely disperse any released refrigerant and preferably expel it externally into the atmosphere.

Checks to the refrigeration equipment

Where electrical components are being changed, they shall be fit for the purpose and to the correct specification. At all times the instructions within this document should be followed. If in doubt consult the manufacturer’s technical department for assistance (see page 68).

The following checks shall be applied to installations using flammable refrigerants:

- The charge size is in accordance with the room size within which the refrigerant containing parts are installed;
- The ventilation machinery and outlets are operating adequately and are not obstructed;
- If an indirect refrigerating circuit is being used, the secondary circuit shall be checked for the presence of refrigerant;
- Marking to the equipment continues to be visible and legible. Markings and signs that are illegible shall be corrected;
- Refrigeration pipe or components are installed in a position where they are unlikely to be exposed to any substance which may corrode refrigerant containing components, unless the components are constructed of materials which are inherently resistant to being corroded or are suitably protected against being so corroded.

Checks to electrical devices

Repair and maintenance to electrical components shall include initial safety checks and component inspection procedures.

If a fault exists that could compromise safety, then no electrical supply shall be connected to the circuit until it is satisfactorily dealt with.

If the fault cannot be corrected immediately but it is necessary to continue operation, an adequate temporary solution shall be used. This shall be reported to the owner of the equipment so all parties are advised.

Initial safety checks shall include:

- That capacitors are discharged: this shall be done in a safe manner to avoid possibility of sparking;
- That no live electrical components and wiring are exposed while charging, recovering or purging the system;
- That there is continuity of earth bonding.

Important Refrigerant Unit Installation, Servicing and Decommissioning information

Repairs to sealed components

During repairs to sealed components, all electrical supplies shall be disconnected from the equipment being worked upon prior to any removal of sealed covers, etc. If it is absolutely necessary to have an electrical supply to equipment during servicing, then a permanently operating form of leak detection shall be located at the most critical point to warn of a potentially hazardous situation.

Particular attention shall be paid to the following to ensure that by working on electrical components, the casing is not altered in such a way that the level of protection is affected. This shall include damage to cables, excessive number of connections, terminals not made to original specification, damage to seals, incorrect fitting of glands, etc.

Ensure that apparatus is mounted securely.

Ensure that seals or sealing materials have not degraded such that they no longer serve the purpose of preventing the ingress of flammable atmospheres. Replacement parts shall be in accordance with manufacturer's information.

Repair to intrinsically safe components

Do not apply any permanent inductive or capacitance loads to the circuit without ensuring that this will not exceed the permissible voltage and current permitted for the equipment in use.

Intrinsically safe components are the only types that can be worked on while live in the presence of a flammable atmosphere. The test apparatus shall be at the correct rating. Replace components only with parts specified by the manufacturer. Other parts may result in the ignition of refrigerant in the atmosphere from a leak.

NOTE: The use of silicon sealant may inhibit the effectiveness of some types of leak detection equipment. Intrinsically safe components do not have to be isolated prior to working on them.

Cabling

Check that cabling will not be subject to wear, corrosion, excessive pressure, vibration, sharp edges or any other adverse environmental effects.

The check shall also take into account the effects of ageing or continual vibration from sources such as compressors or fans.

Detection of flammable refrigerants

Under no circumstances shall potential sources of ignition be used in the searching for or detection of refrigerant leaks. A halide torch (or any other detector using a naked flame) shall not be used accordance with the manufacturer’s specifications. Ensure that no live electrical components and wiring are exposed while charging, recovering or purging the system.

Leak detection methods

The following leak detection methods are deemed acceptable for systems containing flammable refrigerants.

Electronic leak detectors shall be used to detect flammable refrigerants, but the sensitivity may not be adequate, or may need re-calibration. (Detection equipment shall be calibrated in a refrigerant-free area.)

Ensure that the detector is not a potential source of ignition and is suitable for the refrigerant used.

Leak detection equipment shall be set at a percentage of the LFL of the refrigerant and shall be calibrated to the refrigerant employed and the appropriate percentage of gas (25 % maximum) is confirmed.

Leak detection fluids are suitable for use with most refrigerants but the use of detergents containing chlorine shall be avoided as the chlorine may react with the refrigerant and corrode the copper pipe-work.

If a leak is suspected, all naked flames shall be removed/extinguished.

If a leakage of refrigerant is found which requires brazing, all of the refrigerant shall be recovered from the system, or isolated (by means of shut off valves) in a part of the system remote from the leak. Oxygen free nitrogen (OFN) shall then be purged through the system both before and during the brazing process.

Important Refrigerant Unit Installation, Servicing and Decommissioning information

Removal and evacuation

When breaking into the refrigerant circuit to make repairs – or for any other purpose – conventional procedures shall be used. However, it is important that best practice is followed since flammability is a consideration. The following procedure shall be adhered to:

- remove refrigerant;
- purge the circuit with inert gas;
- evacuate;
- purge again with inert gas;
- open the circuit by cutting or brazing.

The refrigerant charge shall be recovered into the correct recovery cylinders. The system shall be "flushed" with OFN to render the unit safe. This process may need to be repeated several times. Compressed air or oxygen shall not be used for this task.
Flushing shall be achieved by breaking the vacuum in the system with OFN and continuing to fill until the working pressure is achieved, then venting to atmosphere, and finally pulling down to a vacuum. This process shall be repeated until no refrigerant is within the system. When the final OFN charge is used, the system shall be vented down to atmospheric pressure to enable work to take place. This operation is absolutely vital if brazing operations on the pipework are to take place.
Ensure that the outlet for the vacuum pump is not close to any ignition sources and there is ventilation available.

Charging procedures

In addition to conventional charging procedures, the following requirements shall be followed.

- Ensure that contamination of different refrigerants does not occur when using charging equipment. Hoses or lines shall be as short as possible to minimise the amount of refrigerant contained in them.
- Cylinders shall be kept upright.
- Ensure that the refrigeration system is earthed prior to charging the system with refrigerant.
- Label the system when charging is complete (if not already).
- Extreme care shall be taken not to overfill the refrigeration system.

Prior to recharging the system it shall be pressure tested with OFN. The system shall be leak tested on completion of charging but prior to commissioning. A follow up leak test shall be carried out prior to leaving the site.

Labelling

Equipment shall be labelled stating that it has been de-commissioned and emptied of refrigerant. The label shall be dated and signed. Ensure that there are labels on the equipment stating the equipment contains flammable refrigerant.

Recovery

When removing refrigerant from a system, either for servicing or decommissioning, only technical trained and qualified Engineers with the appropriate equipment should remove any refrigerant from the system. Please contact Vent Axia (see page 60) for further guidance.

When transferring refrigerant into cylinders, ensure that only appropriate refrigerant recovery cylinders are employed. Ensure that the correct number of cylinders for holding the total system charge are available. All cylinders to be used are designated for the recovered refrigerant and labelled for that refrigerant (i.e. special cylinders for the recovery of
refrigerant).
Cylinders shall be complete with pressure relief valve and associated shut-off valves in good working order. Empty recovery cylinders are evacuated and, if possible, cooled before recovery occurs.
The recovery equipment shall be in good working order with a set of instructions concerning the equipment that is at hand and shall be suitable for the recovery of flammable refrigerants.

In addition, a set of calibrated weighing scales shall be available and in good working order.
Hoses shall be complete with leak-free disconnect couplings and in good condition.

Important Refrigerant Unit Installation, Servicing and Decommissioning information

Before using the recovery machine, check that it is in satisfactory working order, has been properly maintained and that any associated electrical components are sealed to prevent ignition in the event of a refrigerant release. Consult manufacturer if in doubt.

The recovered refrigerant shall be returned to a suitably licenced refrigerant supplier in the correct recovery cylinder, and the relevant Waste Transfer Note arranged.
Do not mix refrigerants in recovery units and especially not in cylinders.

If compressors or compressor oils are to be removed, ensure that they have been evacuated to an acceptable level to make certain that flammable refrigerant does not remain within the lubricant.

The evacuation process shall be carried out prior to returning the compressor to the suppliers. Only electric heating to the compressor body shall be employed to accelerate this process. When oil is drained from a system, it shall be carried out safely.

Decommissioning

Before carrying out this procedure, it is essential that the technician is completely familiar with the equipment and all its detail.
It is recommended good practice that all refrigerants are recovered safely.
Prior to the task being carried out, an oil and refrigerant sample shall be taken in case analysis is required prior to re-use of reclaimed refrigerant.

It is essential that electrical power is available before the task is commenced.

a) Become familiar with the equipment and its operation.
b) Isolate system electrically.
c) Before attempting the procedure ensure that:
   - mechanical handling equipment is available, if required, for handling refrigerant cylinders;
   - all personal protective equipment is available and being used correctly;
   - the recovery process is supervised at all times by a competent person;
   - recovery equipment and cylinders conform to the appropriate standards.
d) Pump down refrigerant system, if possible.
e) If a vacuum is not possible, make a manifold so that refrigerant can be removed from various parts of the system.
f) Make sure that cylinder is situated on the scales before recovery takes place.
g) Start the recovery machine and operate in accordance with manufacturer's instructions.
h) Do not overfill cylinders. (No more than 80 % volume liquid charge).
i) Do not exceed the maximum working pressure of the cylinder, even temporarily.
j) When the cylinders have been filled correctly and the process completed, make sure that the cylinders and the equipment are removed from site promptly and all isolation valves on the equipment are closed off.
k) Recovered refrigerant shall not be charged into another refrigeration system unless it has been cleaned and checked.

Spares

The following spare parts may be ordered from Vent-Axia:

Sentinel Econiq MVHR (Base Unit) Spares

Part No	Description
---------	Main PCBA – **Contact Technical Support**
411622	Control Module (HMI Controller with Display & with RF)
411690	Filters G4, 2 per pack
411691	Filters M5, 1 per pack
411692	Filters F7, 1 per pack
411695	Motor Scroll Assembly
411693	Cell Flap Actuator Summer Bypass Assembly
411765	Summer Bypass Passage Assembly
411696	Temperature Sensors T2 & T4 (Red & Brown)
411698	Temperature/Humidity Sensors T1 & T3 (Green & Yellow)
411704	Condensate Drain Cap & Adaptor
411705	Spigot Adaptor 200mm
411889	Spigot Blank with Foam
417046	Cool-Flow Control PCBA
417047	Cool-Flow Interface PCBA
417048	Cool-Flow Relay
417049	Cool-Flow Capacitor

Note: Please contact Technical Support for available Econiq Cool-Flow Module (Top Unit) Spares and Refrigeration / Compressor details.

Diagnosing a Problem

In the event of a problem, always troubleshoot the unit according to:

- **Notification code** displayed on the control unit.
  A notification flag indicates service/maintenance will be due soon.
- **Warning code** displayed on the control unit.
  A warning code is advisory and will not immediately stop the function of the unit.
- **Fault code** displayed on the Control Unit.
  The unit may have stopped functioning due to the fault.
- **Fault LED** if connected.

Service/Fault Codes

For assistance contact the service provider and quote the fault code number and the product serial number which can be found behind the front cover.
Note that the fault code is not displayed until the fault has been present for 5 minutes.

Fault Codes	
ID	**Cause**
F-1	Intake Temperature
F-2	Extract Temperature
F-3	Supply Fan
F-4	Extract Fan
F-8	Supply Too cold
F-32	HMI Comms Lost

Warning Codes	
ID	**Cause**
W-1	Supply temperature
W-2	Exhaust temperature
W-4	Intake RH
W-5	Extract RH
W-6	Supply flow
W-7	Extract flow
W-8	Filter sensor 1
W-9	Filter sensor 2
W-10	System over-pressure
W-12	Filter clean overdue
W-13	Service overdue
W-14	Network Sensor lost
W-15	BMS offline
W-16	Supply fan Modbus
W-17	Extract fan Modbus
W-18	Bypass/cell efficiency
W-20	Cooling Unit offline

Notification Codes	
ID	**Cause**
N-1	Filter Clean/Replace due soon
N-2	Service due Soon
N-3	Device Offline
N-4	Cooling is suspended
N-5	Cooling insufficient

There may be new fault codes not listed here, please ensure that you always review the latest F&W available on our website under the product page and downloads.

Note:
- **Warnings 1-7,10,11 and 20 will clear once the issue has been resolved and power cycled.**
- **Warnings 12-19 will clear once conditions no longer met.**

* Refer Page 51 to 52 for more details.

Faults	Title	Description	How to solve?
F-01	**Faulty intake temperature sensor**	Intake temperature sensor is not reporting a valid value and has been flagged as faulty. The machine has shut down because of this, since this sensor is required for frost protection.	Replace sensor
F-02	**Faulty extract temperature sensor**	Extract temperature sensor is not reporting a valid value and has been flagged as faulty. The machine has shut down because of this, since this sensor is required for frost protection.	Replace sensor
F-03	**Faulty supply fan**	Supply fan tacho is reporting the fan is not turning. The machine has shut down do prevent improper operation.	Investigate wiring and / or replace fan
F-04	**Faulty extract fan**	Extract fan tacho is reporting the fan is not turning. The machine has shut down do prevent improper operation.	Investigate wiring and / or replace fan
F-08	**Supply too cold**	The supply air was measured as being near or below +5°C, so the machine has been shut down to prevent potential issues with equipment down-stream in the duct.	Check handing is configured correctly. Check condition of HX cell. Ensure property is sufficiently heated (may be accompanied by "room too cold" machine state)
…			
F-32	**HMI failing to communicate**	The HMI is failing to receive messages from the mainboard.	Check wiring / comms between HMI and mainboard. Check mainboard operation.

Notifications	Title	Description	How to solve?
N-01	**Filters due for clean/replace soon**	The filters have been detected as needing cleaning/replacing soon.	Arrange for cleaning of filters or order replacements [add URL for ordering]
N-02	**Service due soon**	Service of this machine is due soon.	Contact your installer to arrange for service
N-03	**Networked sensor / device offline**	Machine has not received expected messages / heartbeats from a networked sensor / device. If this continues, the device will show as "lost" and this notification will elevate to a warning.	Check wiring or signal strength for the affected device.
N-04	**Cooling suspended**	Cooling has been demanded but cannot run either due to compressor overheat and/or high/low pressure trip, or mains isolated to the cooling unit.	Allow some time for the compressor to cool / pressure normalise. Verify cooling unit is powered. Otherwise contact service to investigate cooling circuit if this persists.
N-05	**Cooling ineffective**	The cooler is turned on but no significant drop of temperature measured across the evaporator.	Contact service to investigate cooling circuit if this persists.

Warnings	Title	Description	How to solve?
W-01	**Faulty supply temperature sensor**	Supply temperature sensor is not reporting a valid value and has been flagged as faulty. This should not impact operation of the system but means current Heat Recovery % cannot be calculated.	Replace sensor.
W-02	**Faulty exhaust temperature sensor**	Exhaust temperature sensor is not reporting a valid value and has been flagged as faulty. The system cannot detect if it is running in condensing conditions and constant-volume operation may be affected.	Replace sensor.
W-04	**Faulty intake RH sensor**	Intake RH sensor is not reporting a valid value and has been flagged as faulty. This value is for indication purposes only and will not affect the operation of the system.	Replace sensor.

W-05	**Faulty extract RH sensor**	Extract RH sensor is not reporting a valid value and has been flagged as faulty. Automatic boost based on the value read from this sensor will not be available.	Replace sensor.
W-06	**Faulty supply flow sensor**	Supply flow sensor is not reporting a valid value and has been flagged as faulty. Constant volume operation will not be available.	Replace sensor.
W-07	**Faulty extract flow sensor**	Extract flow sensor is not reporting a valid value and has been flagged as faulty. Constant volume operation will not be available.	Replace sensor.
W-08	**Faulty filter sensor 1**	Filter 1 pressure sensor is not reporting a valid value and has been flagged as faulty. Pressure based dirty filter indication will not be available for this filter and operation will revert to time-based indication only.	Replace sensor.
W-09	**Faulty filter sensor 2**	Filter 2 pressure sensor is not reporting a valid value and has been flagged as faulty. Pressure based dirty filter indication will not be available for this filter and operation will revert to time-based indication only.	Replace sensor.
W-10	**Excessive system pressure**	It has been detected that the fans are operating outside of the normally expected range for a good system. This may be caused by a blockage in the ductwork, incorrectly specified ducting or a machine that is not large enough for the install.	Contact installer to investigate system.
W-12	**Filters overdue for cleaning / replacement**	The clean filter timer has expired / the filters have been detected as clogged and require cleaning or replacement. [Add URL for purchasing new filters]	Either purchase new filters and replace or clean existing filters (as appropriate).
W-13	**Machine overdue for service**	The machine service timer has expired.	Contact installer to service your machine [add phone number / email]
W-14	**Networked sensor / device has stopped responding**	Machine is no longer receiving messages / heartbeats from a networked sensor / device.	Check batteries / network cable / for RF interference as appropriate.
W-15	**BMS has stopped responding**	Attached building management system as stopped communicating with this system.	Refer to troubleshooting steps of the BMS.
W-16	**Supply fan offline**	Communication to the supply fan has stopped working. Power calculations will revert to an estimation.	Investigate wiring and / or replace fan.
W-17	**Extract fan offline**	Communication to the extract fan has stopped working. Power calculations will revert to an estimation.	Investigate wiring and / or replace fan.
W-18	**Bypass / cell issue detected**	Unusual efficiency detected for heat exchanger cell / bypass. Heat recovery may not be optimal.	Investigate summer bypass and / or heat exchanger.
W-20	**Cooling unit accessory offline**	Communication with the cooling unit controller is not working. DX cooling functionality will not be available.	Investigate control wiring and cooling-unit module.
W-21	**Cooling unit overheating**	The cooling unit compressor has been detected overheating - airflow has been automatically increased in an attempt to resolve this automatically.	Verify the preset configured for cooling has adequate flow and increase as needed.

Power on Self-Test

The LED blinks RED for ‘X’ times, based on the error bit flag that is set.
e.g. “Storage” 3x flash – Pause – 3x flash…….

MVHR (HMI)

Self-Test Failures	
Flash	**HMI**
1	RNG - Random Number Generator (RNG) peripheral has failed as part of self-test routine
2	Flash - DS-45DB081E flash chip initialisation failed
3	Storage – Error with Read/Write access to flash
4	HMI – Initialisation for UC1677LCD (LCD driver) failed
5	CapSense – Error with initialisation of CAP1298
6	SHT3x – Sensor Initialisation failed
7	ESP32 – No response the Sync event as part of self-test
8	RF868 – Core 2 not initialized, or Auto Tune has failed (Auto tune yet to be added)
9	AppInit- Error with respect to Initialisation of Application modules

MVHR (Mainboard)

Self-Test Failures	
Flash	**Mainboard**
1	RNG - Random Number Generator (RNG) peripheral has failed as part of self-test routine
2	RTC – RTC initialisation failed
3	*Eeprom(reserved) – not used for now*
4	Flash – DS-45DB081E flash chip initialisation failed
5	Storage – Error with Read/Write access to flash
6	External RAM – FM24V01A RAM Chip Initialisation failed
7	Ventilation Engine – Ventilation Engine not initialised
8	AppInit- Error with respect to Initialisation of Application modules
9	Modbus – Modbus intialisation failure

Accessories

Part No	Description
496429	Temp/RH Wired & Wireless RS485 & RF868
496431	Temp/RH Battery Powered
496433	CO2 +Temp & RH Wired & Wireless
496438	PIR Wired & Wireless
496437	SSU Speed Switch 4-WAY Battery, Wireless (White)
497689	SSU Speed Switch 4-WAY Battery, Wireless (Black)
496620	SSU Speed Switch 4-WAY Mains, Wireless (White)
497693	SSU Speed Switch 4-WAY Mains, Wireless (Black)
496621	SSU Speed Switch 4-WAY Mains, Wired (White)
497697	SSU Speed Switch 4-WAY Mains, Wired (Black)
411704	Condensate drain
448356	Remote LED indicator and lead

Radio Equipment Directive (RED) data

	Frequency Range	Maximum Radio Frequency Power
Wireless (868)	868.0 - 868.6 MHz	+15dBm
Bluetooth	2.4 – 2.483 GHz	+9dBm
Wi-Fi	2.4 – 2.484 GHz	+20.5dBm (802.11b) +14dBm (802.11n)

Flow Rate Settings

The Unit has four user defined speeds which are adjustable in the Advanced menu or via the App. The default speed names are also customisable via the App.

Default speed modes names: -

- Low
- Normal (Unit default operating mode)
- Boost
- Purge

Note: The Minimum speed for Sentinel Econiq Cool-Flow Module (Top Unit) to run is ≥60% which is equivalent to 288m^3/hr (80l/s) at 150pa.
For more details see Page 68.

Frost Protection

Frost Protection is required to prevent condensate freezing in the heat exchanger at low temperatures. The process is fully automatic. The method used for frost protection will depend on the model and building it is installed in. *For more details refer to the Page 37 on this manual.*

For buildings with a leak rate of 3m^3/hr or less (at 50Pa), a balanced frost protection mode must be used. A balanced mode must also be used when a combustion device without a dedicated air supply is present.

Airflow (Imbalanced)

Airflow mode reduces the Intake flow and increases the Extract flow in varying proportions dependent on the incoming air temperature. The unit will continue to recover heat as low as “-20°C”. At this point, the unit switches to 'Extract Only' mode.

Bypass (Balanced)

Bypass mode opens the Summer Bypass and stops recovering heat until the external temperature increases sufficiently. **Please be aware that Frost Protection is not advised in this mode.**

Use Cases

The Potential user cases are listed below:

- An Overrun Timer is configurable through the switch inputs settings.
- The Econiq MVHR will utilise free cooling first via the summer bypass and the cooling will be energised automatically when internal temperature settings & measurements create cooling demand.
- If heating source (Eg. boiler/heat pump) is linked to the Econiq MVHR and enabled, cooling will be inhibited to prevent heating as well as cooling working against each other.

Modbus Registers

RS485 settings can be set via the Vent-Axia Connect App.

Register Map

Input Registers	Description	Unit
30001	Run time	uint16 days
30002	Service timer	uint16 months remaining
30003	Filter timer	uint16 months remaining
30004	Faults present h	uint32 bitmask
30005	Faults present l	
30006	Warnings present h	uint32 bitmask
30007	Warnings present l	
30008	Notifications present h	uint32 bitmask
30009	Notifications present l	
30010	System power	uint16 W
30020	Attention Ventilation LED output	bool
30021	Cooling enable output	bool
30022	Preheater enable output	bool
30023	*Other output sources...*	bool
30100	Intake duct temperature T1	int16 °C x10
30101	Intake duct RH	uint16 %
30102	Intake duct CO2	uint16 PPM
30110	Supply duct temperature T2	int16 °C x10
30120	Extract duct temperature T3	int16 °C x10
30121	Extract duct RH	uint16 %
30122	Extract duct CO2	uint16 PPM
30130	Exhaust duct temperature T4	int16 °C x10
30200	Zone 0 Temperature	int16 °C x10
30201	Zone 0 RH	uint16 %
30202	Zone 0 CO2	uint16 PPM
30210	Zone 1...	
30220	Zone 2...	
30230	Zone 3...	
30240	Zone 4...	
30250	Zone 5...	
30260	Zone 6...	
30270	Zone 7...	
30280	Zone 8...	
30290	Zone 9...	
30300	Zone 10...	
30310	Zone 11...	
30320	Zone 12...	
30330	Zone 13...	
30340	Zone 14...	
30350	Zone 15...	

Holding Register	Description	Unit
40001	Virtual Input 1	Int16 x10
40002	Virtual Input 2	Int16 x10
40003	Virtual Input 3	Int16 x10
40004	Virtual Input 4	Int16 x10
40005	Virtual Input 5	Int16 x10
40006	Virtual Input 6	Int16 x10
40007	Virtual Input 7	Int16 x10
40008	Virtual Input 8	Int16 x10
40009	Virtual Input 9	Int16 x10
40010	Virtual Input 10	Int16 x10
40020	BMS Shutdown	Int16 x10
40030	User Override	Int16 x10
40040	Machine Date - Year	uint16
40041	Machine Date - Month/Day	2x uint8
40042	Machine Time - hh:mm	2x uint8

Attribute	Default Value
Address	2
Baud Rate	115200
Parity	No Parity

Summer Bypass Mode and Internal Comfort Temperature for Cooling

The MVHR includes an intelligent Summer Bypass (SBP) feature, this bypasses the heat exchanger when necessary to provide free cooling, this is triggered when the desired Indoor Temperature is above the ambient temperature.

Note that the volume of air provided by a ventilation system is a fraction of that required for space heating or space cooling and will not in itself be sufficient to cool a room. It will however provide a contribution.

Modes of operation

Bypass Mode	Operation
00 : Off	Summer Bypass feature is disabled, Bypass will be active during Anti-frost
01 : Normal	When active the unit will run on Normal speed, conditions no longer met
02 : Evening Fresh	When active the unit will run on the user selected speed for 5-hours before reverting to Normal, until conditions are no longer met
03 : Night-Time Fresh*	When active the unit will run at the user selected speed, until conditions are no longer met
04 : Modulated Normal	When active the unit will run on Modulated Normal speed, unless cancelled
05: Modulated Evening Fresh	When active the unit will run on the user selected speed for 5-hours before reverting to Modulated Normal, until conditions are no longer met
06 : Modulated Night-Time Fresh	When active the unit will run at the user selected speed, until conditions are no longer met

Bypass mode will operate when both the Indoor and Outdoor temperature thresholds are exceeded, and the outdoor temperature is below the indoor temperature.

Mode 1 to 3 when active will operate at 100% Bypass of the heat recovery cell.
Mode 4 to 6 when active will operate at approximately 50% Bypass of the heat recovery cell, this allows partial heat recovery during colder periods.

Indoor Temp: This is the maximum desired indoor temperature. Above the set indoor temperature, the summer bypass will operate.

Indoor temp should be set, 2-3°C higher than the central heating thermostat to prevent the bypass operating in winter, and 2-3°C lower than any air conditioning thermostat if fitted.

Outdoor Temp: This is the minimum allowed outdoor air temperature. The air temperature must be above this value for the Bypass to operate, use this value to prevent the bypass operating in winter.

The suggested Outdoor Temp, is 14°C, set as appropriate for your region.

Bypass mode will be cancelled until conditions no longer met when either :

- The internal air temperature drops below the Indoor Temp threshold, or
- The external air temperature drops below the Outdoor Temp threshold

It is recommended that the user selected mode chosen for Evening Fresh and Night-Time Fresh is higher than Normal flow rate to reduce the indoor temperature more rapidly.

*Night-Time Fresh Mode is intended for use through the night when cooling is a higher priority than any increase of noise. Note, that the air noise in your system is influenced by flowrate, ducting design, layout and the size and type of vents used in the rooms. If improvements are required, please contact your installer.

Input Ports allocation menu

Inputs are allocated to zone 0 by default.

Mains (LSx) or Dry Contact (voltage free) (SWx) are applicable to all modes on all LS/SW inputs.

Continuous

Continuous menu is used with a rocker switch or Relay.

The input shall result in the continuous running of the Airflow Mode selected.

In “normal” airflow mode, the delay defines the amount of time the input needs to be active before the override begins. If the input deactivates before the end of the delay, there is no override. Once the override begins, it remains active whilst the input is active. When the input goes inactive, overrun timer begins and the override remains until the timer has elapsed. If the input reactivates during the overrun, the state returns to override active (i.e. the delay is ignored).

- Delay timer - delays the action after the user first operation, (by default closing the switch).
- Overrun timer - continues for the selected time on the preset speed selected, after the rocker switch is operated second time(by default turned off).
- Polarity, changes from the default Normally Open to Normally Closed operation.
- Comfort mode - delays the ventilation unit changing to the preset speed selected (BOOST by default) after the input has been activated for the Overrun time set, to reduce noise and cold drafts while bathing.

With Comfort Mode enabled, activation of the input are as follows:

1. If the input is deactivated within 3 minutes no change will occur.
2. If the input is deactivated between 3-20 minutes, the ventilation unit will change to the selected preset speed with duration of [Overrun] + [Time input was active] minutes.
3. If the input is active for over the [Delay time] minutes, the ventilation unit will change to the selected preset speed; when the input is eventually deactivated, the ventilation unit will continue on the selected preset speed for [Overrun] + [Boost Delay] minutes.

Momentary

Momentary menu is used with a retractive switch type (Push Button) or non-latching pull cord switch.

- Overrun timer - continues for the selected time on the preset speed selected, after the switch is operated.
- Second operation will cancel and return to Normal (default) speed preselected.

PIR
PIR is used with a Presence detection sensor.

- Overrun timer - continues for the selected time, on the preset speed selected, after the presence detected. If during the Overrun time a new presence is detected, the Overrun timer will restart.

Fire Alarm
Fire Alarm is used with a Fire alarm Normally Closed Relay contact.

- The ventilation stops if the Fire alarm Relay contact OPENS.
- This operation can be inverted [Polarity] if the contact available from the Fire Alarm is Normally Open.

Proportional inputs (0-10V)
This type of control is typically used with Temperature sensors, Humidity sensors, CO2 sensors or any other Inner Air Quality sensors, with analog 0-10V outputs. If the voltage is between 0 to 0.5V no sensor will be detected.

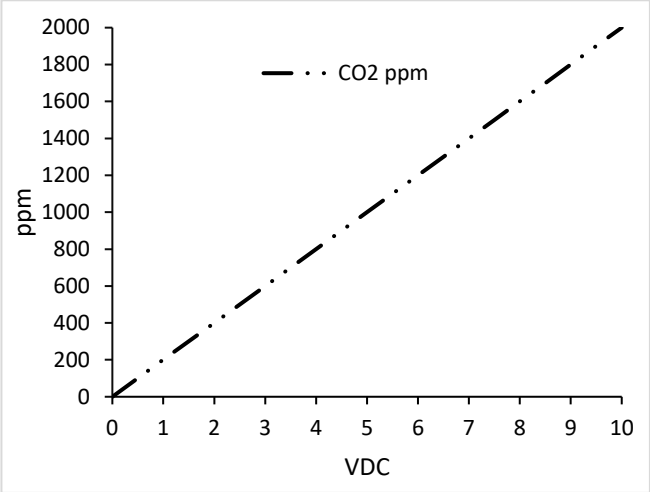

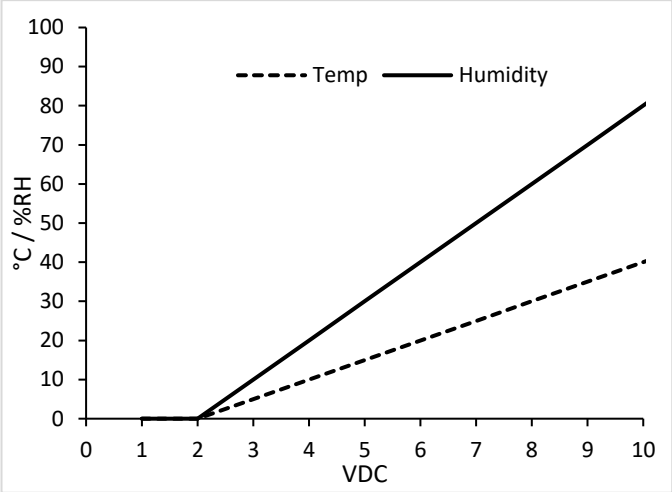

CO2 Sensor Mode

- Two thresholds can be set (this correspond to a Voltage level between 0.5V-0PPM and 9.5V-2000PPM), below the lower threshold the ventilation unit will run in Normal preset speed.
- Between the two thresholds (proportional zone) the ventilation unit will proportionally increase the speed up to Boost preset speed.
- Above the second threshold the ventilation unit will stay in Boost speed preset.

Humidity Sensor Mode

- One threshold can be set (this correspond to a Voltage level between 0.5V-0% and 9.5V-100%), below the lower threshold (10%) the ventilation unit will run in Normal preset speed.
- Above the second thresholds (proportional zone) the ventilation unit will proportionally increase the speed up to 100%.

Pure 0-10V Mode

Intended to be used with one manual override controller (such as BMS with 0-10V output).

- Pure 0-10V sensor units are presented as % (the voltage to % response curve is linear)
- Ventilation unit speed will be linear from Normal speed to 100% (this correspond to a Voltage level between 0.5V-0% and 9.5V-100%).

Relative Humidity Configuration

When RH Sensors are wired into the unit the system is normally operated on four selectable settings: threshold, rapid, ambient and overrun.

Threshold: Proportional control from 10% below the threshold, such that there is 100% demand at the threshold. For example, with a 70% threshold set, the proportional control shall be between 60% RH and 70% RH. Therefore, there will be 50% proportional boost at 65% RH.

This threshold may be set by the user between 50% to 90%. If a threshold of greater than 90% or equal to 100% or lower than 50% or equal tos ≤0% is set, threshold demand shall be disabled.

Rapid: Enable / Disabled - The monitoring of a rapid rise in RH is run every 30 seconds, comparing the current RH level, with that recorded 5 minutes ago. Proportion boost is calculated from the RH delta between +5% and +15%. For example, if the RH 5 minutes ago was 55% and the RH measured now is 65%, that's a delta increase of +10%, so there will be a proportional boost of 50%.

Ambient: Enable / Disabled - The ambient response only affects the RH threshold proportional control and is designed to prevent unwanted ventilation boosts as the ambient temperature drops overnight.
This is achieved by increasing the threshold by 3% for every 1K from the ambient temperature range of 18°C to 12°C. If temperature is not available for a zone, ambient response shall not be available (but standard threshold and rapid-rise still function as normal).

Fan Performance

The Econiq Cool-Flow Module must have a minimum of airflow 80l/s from the Econiq MVHR to ensure components do not overheat. 20% and 40% fan curves are only to be used for the Econiq MVHR running without cooling.

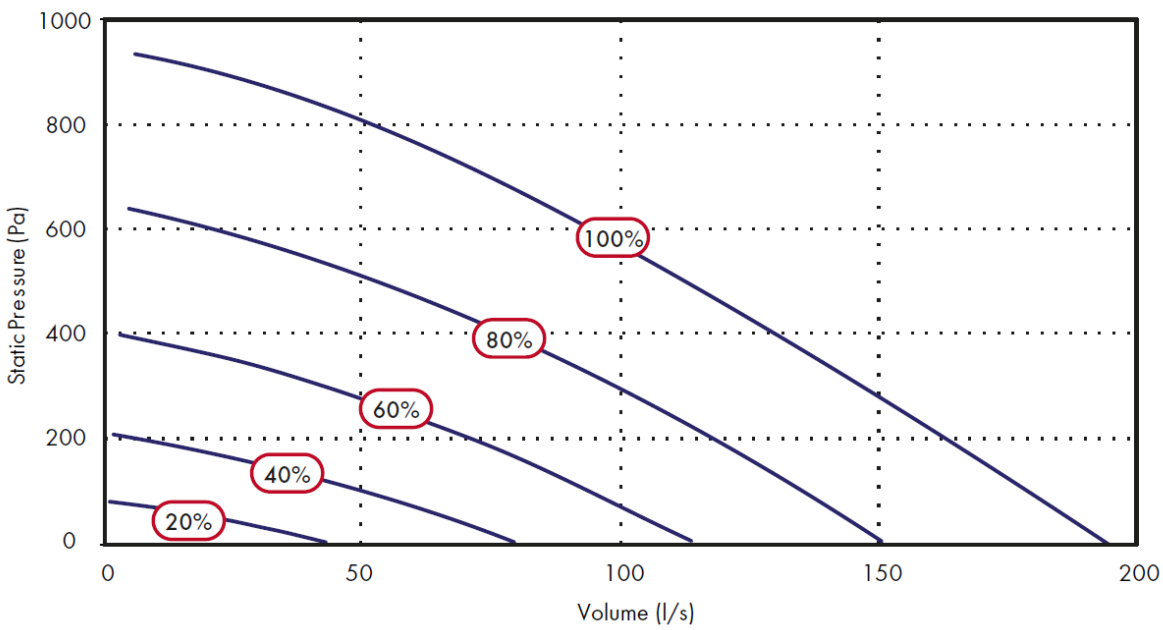

Product Dimensions

Note: Wiring connections front and back, allowing LH & RH fitting by rotating unit 180deg.

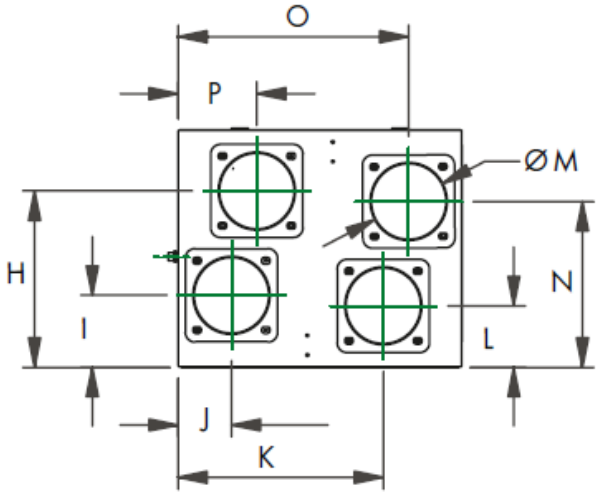

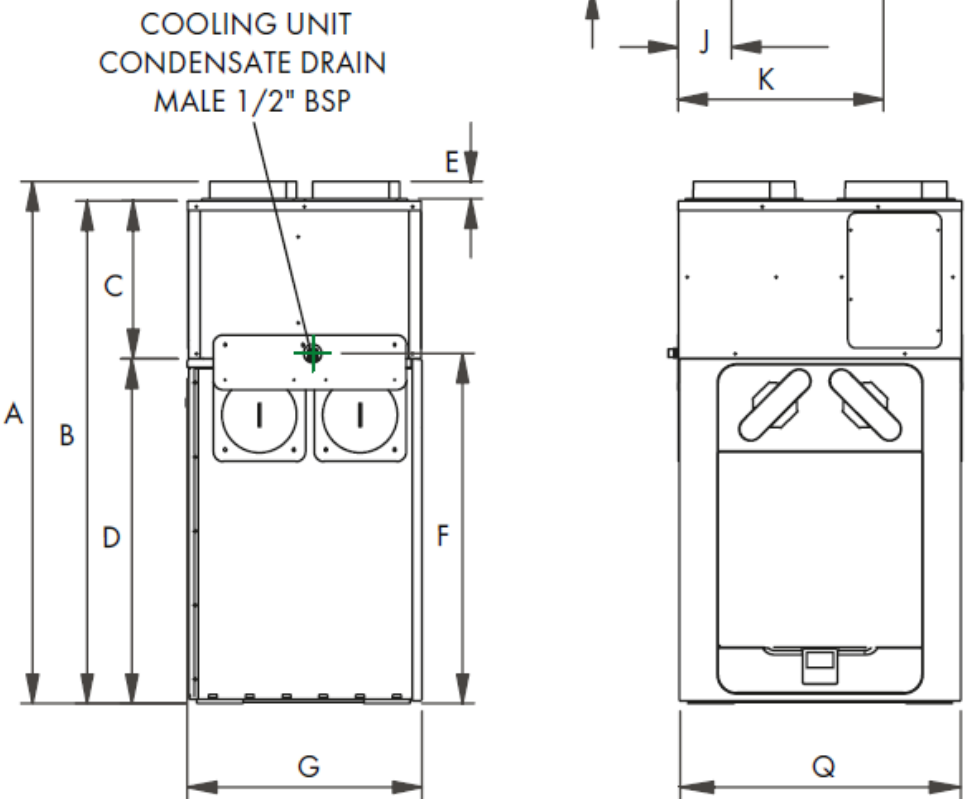

Unit Dimensions (mm)	
A	1329
B	1284
C	403
D	881
E	45
F	895
G	608

Unit Dimensions (mm)	
H	451
I	184
J	138
K	531
L	157
M	200
N	424
O	597
P	204
Q	736

Remove front cover (see page 16) to view Rating label for Econiq MVHR.
(Rating label for Econiq Cool-Flow Module is located near the Condensate drain).

Default Settings

Parameters	Default	Comments
Timeslot (By Date) 1	Start date/time 1/1/1970 0:00, end date/time 1/1/1970 0:00, preset 3, zone 0, not enabled, not silent hours	App only - "Holiday Mode"
Timeslot (By Date) 2-10	As timeslot 1	Not public
Weekly timeslots 1-50	Start 0:00, end 0:00, preset 3, zone 0, not enabled, not silentHrs, no days flagged	
Summer bypass mode	Normal, outside 16, inside 25	
Filter Interval Remaining Months	12	
Service Interval Remaining Months	36	
Unit Configuration	Right hand	
Control Mode	Fixed %	
Airflow units	Litres per second	
Preset flow 1	20/20, name Low	
Preset flow 2	30/30, name Normal	
Preset flow 3	50/50, name Boost	
Preset flow 4	100/100, name Purge	
Live Switch LS1/ LS2 and Switch Inputs SW1/SW2/SW3/SW4/SW5	Continuous, Zone 0, Delay 0, Overrun 15m, preset 3, not silent hours	
Proportional Inputs P1 and P2	CO2, Zone 0	
Zone 0 setting	Type:Extract, Icon:utility, Preset:3 (boost), RH ambient enabled, RH rapid-rise enabled, temperature 21C, RH 70%, CO2:1000-1500 PPM, overrun 15m	These are used for built-in RH+CO2 sensors too
Zone 1-15 setting	As zone 1	App only
Antifrost mode	Airflow imbalanced	
Commissioning PIN	0000	
Service phone	Not set	Settable in App
Commissioning Address	Blank	Settable in App
Commissioning Date	Not set (1/1/1970 0:00)	Settable in App
Commissioning Email	Blank	Settable in App
Phone number	Blank	Settable in App
Machine Name	Blank	Settable in App
Filter type 1	Blank	Settable in App
Filter type 2	Blank	Settable in App
LED Output	Attention Ventilation	Settable in App
BMS Modbus attributes	Mode:Modbus, address 2, serial 115200/8/N/1	To be added to app
BMS Virtual inputs 1 - 10	RH, Zone 0	To be added to app
Networked sensor config (1-31)	Blank name, zone 0	App only

Product Fiche

Name:	Vent-Axia
Model ID (Stock Ref.):	415193 - Sentinel Econiq L Cool-Flow
SEC Class	A+
SEC Value ('Average')	-43.31
SEC Value ('Warm')	-18.16
SEC Value ('Cold')	-87.99
Label Required? (Yes/No=Out of scope)	Yes
Declared as: RVU or NRVU/UVU or BVU	RVU/BVU
Speed Drive	Variable Speed
Type HRS (Recuperative, Regenerative, None)	Recuperative
Thermal Eff: [(%), NA (if none)]	89
Max. Flow Rate (m3/h)	600
Max. Power Input (W): (@Max.Flow Rate)	338
LWA: Sound Power Level (dB)	56.0
Ref. Flow Rate (m3/s)	0.117
Ref. Pressure Diff. (Pa)	50
SPI [W/(m3/h)]	0.22
Control Factor & Control Typology: (CTRL/ Typology)	
Control Factor; CTRL	0.65
Control Typology	Local Demand Control
Declared: -Max Internal & External Leakage Rates (%) for BVUs or carry over (for regenerative heat exchangers only), -&Ext. Leakage Rates (%) for Ducted UVUs;	<5% Internal, <5% External
Mixing Rate of Non-Ducted BVUs not intended to be equipped with one duct connection on either supply or extract air side;	N/A
Position and description of visual filter warning for RVUs intended for use with filters, including text pointing out the importance of regular filter changes for performance and energy efficiency of the unit	Refer to User Instructions
For UVUs (Instructions Install Regulated Supply/Extract Grilles Façade)	N/A
Internet Address (for Disassembly Instructions)	www.vent-axia.com
Sensitivity p. Variation@+20/-20 Pa: (for Non-Ducted VUs)	N/A
Air Tightness-ID/OD-(m3/h) (for Non-Ducted VUs)	N/A
Annual Electricity Consumption: AEC (kWh/a)	1.64
Annual Electricity Consumption: AEC (kWh/a) Per. 100m²	164
Annual Heating Saved: AHS (kWh/a)	
AHS: Average	46.73
AHS: Warm	21.13
AHS: Cold	91.41

Product Fiche

Name/Trademark:	Vent-Axia
Model Identifier (Stock Ref.):	413591 - Econiq Cool-Flow Module
LWA: Sound Power Level (dB) when cooling	63
Refrigerant	R32
Refrigerant GWP (kgCO_2 eq.)	675
Refrigerant leakage contributes to climate change. Refrigerant with lower global warming potential (GWP) would contribute less to global warming than a refrigerant with higher GWP, if leaked to the atmosphere. This appliance contains a refrigerant fluid with a GWP equal to **675**. This means that if 1 kg of this refrigerant fluid would be leaked to the atmosphere, the impact on global warming would be **675** times higher than 1 kg of CO2, over a period of 100 years. Never try to interfere with the refrigerant circuit yourself or disassemble the product yourself and always ask a professional.	
Energy Efficiency Class	A++
Energy consumption **"0.96"** kWh per 60 minutes, based on standard test results. Actual energy consumption will depend on how the appliance is used and where it is located.	
Cooling Capacity (P_{rated})	3.8kW
Internet Address (for Disassembly Instructions)	www.vent-axia.com

Disposal

This product should not be disposed of with household waste. Please recycle where facilities exist. Check with your local authority for recycling advice.

The Vent-Axia Guarantee

Applicable only to products installed and used in the United Kingdom. For details of guarantee outside the United Kingdom contact your local supplier.

Vent-Axia guarantees its products for two years from date of purchase against faulty material or workmanship. In the event of any part being found to be defective, the product will be repaired, or at the Company's option replaced, without charge, provided that the product: -

- Has been installed and used in accordance with the instructions given with each unit.
- Has not been connected to an unsuitable electricity supply. (The correct electricity supply voltage is shown on the product rating label attached to the unit).
- Has not been subjected to misuse, neglect or damage.
- Has not been modified or repaired by any person not authorised by the company.

IF CLAIMING UNDER TERMS OF GUARANTEE

Please return the complete product, carriage paid to your original supplier or nearest Vent-Axia Centre, by post or personal visit. Please ensure that it is adequately packed and accompanied by a letter clearly marked "Guarantee Claim" stating the nature of the fault and providing evidence of date and source of purchase.

The guarantee is offered to you as an extra benefit and does not affect your legal rights.

Vent-Axia

UK Head Office:

Vent-Axia, Fleming Way, Crawley, West Sussex, RH10 9YX
EU Authorised Representative: Vent-Axia Sigarenmaker 5 - 5521DJ Eersel Nederland authorisedrep@vent-axia.nl

CALL CENTRE: -

Sales Enquiries: Tel: 0344 8560590 Email: sales@vent-axia.com

Technical Support: Tel: 0344 8560594 Email: tech@vent-axia.com

414181 E 0925